9045 River Rd,
Indianapolis, IN 46240

Phone: (317) 249-2028
Fax: (724) 416-6121
www.crowncastle.com

July 10, 2020

Ouray County - Land Use, Planning & Building
111 Mall Road, Ridgway, CO 81432

RE: Eligible Facilities Request to modify equipment on a communications tower located at:
MILLION DOLLAR HIGHWAY, RIDGWAY, CO, 81432
Crown Site Number: 858480 / Crown Site Name: ZOD_ALLTEL_CO06_FAR_GOLDEN_CRY
Customer Site Number: DN02489A / Application Number: 484122

Crown Castle USA Inc. ("Crown Castle") on behalf of T-Mobile West LLC ("T-Mobile") is submitting the attached Eligible Facilities Request application to add transmission equipment on a telecommunications tower located at MILLION DOLLAR HIGHWAY, RIDGWAY, CO 81432 in Ouray County - Land Use, Planning & Building (the "ZOD_ALLTEL_CO06_FAR_GOLDEN_CRY Tower").

Section 6409 of the Middle Class Tax Relief and Job Creation Act of 2012, commonly known as the "Spectrum Act" (Pub. Law No. 112-96, 126 Stat 156), mandates that state and local governments "may not deny, and shall approve, any eligible facilities request for a modification of an existing wireless tower or base station that does not substantially change the physical dimensions of such tower or base station." Additionally, if "the reviewing State or local government determines that the application is incomplete" [they] "must provide written notice to the applicant within 30 days of receipt of the application, clearly and specifically delineating all missing documents or information." Under federal law, an Eligible Facilities Request is deemed granted with written notification in sixty (60) days after an application is filed with a local jurisdiction, excluding tolling. Based on the submittal date of July 14, 2020, 30 days will expire on August 13, 2020; 60 days will expire on September 12, 2020.

T-Mobile proposes to modify the "ZOD_ALLTEL_CO06_FAR_GOLDEN_CRY Tower" as follows: Collocation of antennas, ancillary equipment, ground equipment and camouflage materials as per plans for a second wireless carrier on an existing wireless communication facility. The proposed collocation includes placing the second antenna array to include a six (6) foot separation from the existing antenna array.

Itemized list of submittal documents:
Permit Application, Check, LL LOA, Current Lease/Dimensions, Elevation Dimension Drawing, Site Plan/Construction Drawing, Concealment Designs, Evergreen Photos, Structural Analysis, FCC Order

T-Mobile is committed to working cooperatively with all jurisdictions around the country to secure expeditious approval of requests to modify existing personal wireless service facilities. If you should require more information regarding the Spectrum Act, please do not hesitate to contact me with your questions.

Sincerely,

Michael J Gasser
Michael Gasser
Michael.Gasser@crowncastle.com / (317) 249-2028

MODIFICATION: EXISTING TELECOMMUNICATIONS FACILITIES

Please note that all proposals for modifications to existing telecommunication facilities must submit this form *and* receive approval from the Board of County Commissioners *prior* to commencing with any proposed modification. If proposed modification considered a *substantial change*, applicant should proceed with an application for Special Use Permit.

Applicant or Authorized Agent: Michael Gasser , agent for T-Mobile

Mailing Address: 9045 River Road, Suite 425 City/ST/Zip: Indianapolis, IN 46240

Phone: 317-249-2028 Cell: 17-919-42313 Email Address: michael.gasser@crowncastle.com

---

Subject Property/Parcel Owner: Golden Crystal Compay

Mailing Address: PO Box 1 City/ST/Zip: Ouray, CO 81427

Phone: _____ Cell: _____ Email Address: _____

Date of Original Tower Approval: 14July2015 Resolution #: 2015-022

Description of Proposed Modification:

The collocation of antennas, ancillary equipment, ground equipment and camouflage materials as per plans for a second wireless carrier on an existing wireless communication facility. The proposed collocation includes placing the second antenna array with a six (6) foot separation from the existing antenna array.

Collocation of a second carrier in lieu of a second tower facility complies with Section 23 of the Ouray County Zoning Ordinance. The proposed facility improvements meet or exceeds all federal guidelines and is an eligible facility request as the proposed collocation does not constitute a substantial expansion of the existing wireless facility which has been legally established under resolution 2015-022. As depicted in the modification designs the collocation includes additions stealth materials to cover not only the proposed equipment but additional stealth materials for the existing mono-pine structure with the intent of improving the entire concealment design.

For clarification that the proposed facility constitutes an eligible facilities request under Section 6409(a) of the Spectrum Act of 2012, applicant has included a copy of the FCC Declaratory Ruling and Notice of Proposed Rulemaking. The ruling further clarifies several elements of Section 6409(a) including height increases, concealment elements and conditions associated with the sitting approval.

Applicant declares and confirms that the proposed modifications to an existing telecommunications facility *is a substantial change* and therefore the provisions of HR-3630 are not applicable and the Applicant agrees to proceed with the County Special Use Permit application.

Applicant Signature: _____ Title: Real Estate Specialist

Representing: Agent for T-Mobile and Crown Castle USA Inc. employee Date: 10 July 2020

<u>The following information must accompany ALL applications:</u> (*where applicant did not sign above)*

[X] Current copy of any required lease or easement documentation

[X] Elevation Drawing: Showing the profile of the existing tower vs. the proposed modification (inc. colors/materials)

[X] Purpose/Function: Documentation explaining the purpose and/or function of the existing tower vs. the proposed.

[X] Site plan showing location of all existing and proposed improvements.

[X] If proposed modification is declared by the Applicant to be an emergency, or, directly affects the Health/Safety/ Welfare of the Citizens of Ouray County, written justification from Applicant must be attached to this application.

If Applicant declares modification to be "*not a substantial change*" per the FCC document FCC 14-153, <u>detailed information</u> must be provided affirming that the following criteria are not exceeded:

Substantial Change. A modification substantially changes the physical dimensions of an eligible support structure if it meets any of the following criteria:

(i) for towers other than towers in the public rights-of-way, it increases the height of the tower by more than 10% or by the height of one additional antenna array with separation from the nearest existing antenna not to exceed twenty feet, whichever is greater; for other eligible support structures, it increases the height of the structure by more than 10% or more than ten feet, whichever is greater;

(B) Changes in height should be measured from the original support structure in cases where deployments are or will be separated horizontally, such as on buildings' rooftops; in other circumstances, changes in height should be measured from the dimensions of the tower or base station, inclusive of originally approved appurtenances and any modifications that were approved prior to the passage of the Spectrum Act.

(ii) for towers other than towers in the public rights-of-way, it involves adding an appurtenance to the body of the tower that would protrude from the edge of the tower more than twenty feet, or more than the width of the tower structure at the level of the appurtenance, whichever is greater; for other eligible support structures, it involves adding an appurtenance to the body of the structure that would protrude from the edge of the structure by more than six feet;

(iii) for any eligible support structure, it involves installation of more than the standard number of new equipment cabinets for the technology involved, but not to exceed four cabinets; or, for towers in the public rights-of-way and base stations, it involves installation of any new equipment cabinets on the ground if there are no pre-existing ground cabinets associated with the structure, or else involves installation of ground cabinets that are more than 10% larger in height or overall volume than any other ground cabinets associated with the structure;

(iv) it entails any excavation or deployment outside the current site;

(v) it would defeat the concealment elements of the eligible support structure; or

(vi) it does not comply with conditions associated with the siting approval of the construction or modification of the eligible support structure or base station equipment, provided however that this limitation does not apply to any modification that is noncompliant only in a manner that would not exceed the thresholds identified in §1.40001(b)(7)(i)-(iv).

Signature of Owner(s) or Agent	10 July 2020 **Date**

STAFF REVIEW AND PROCESSING OF APPLICATION

[ ] All required materials/information submitted with application.

Date of Application Acceptance by Staff:____/____/_____

[ ] Application materials sent to any applicable HOA/ACC and/or neighboring parcel owners.

Date Sent**:** ____/____/_____

[ ] Application materials sent to adjacent, adjoining, abutting owners. (If not in PUD or Sub.)

Date Sent**:** ____/____/_____

[ ] Application materials posted on Land Use Page on County web site.

Date Posted**:** ____/____/_____

[ ] Application materials submitted to County Attorney for review and comment.

Date of Submission: ____/____/_____

[ ] Application scheduled for review by BOCC in regular meeting. (Next available date!)

Date of Meeting: ____/____/_____

Staff finds proposed modification to be:

[ ] – Substantial Change **[ ] – Not a Substantial Change**

Notes/Comments: _____

County Attorney finds proposed modification to be:

[ ] – Substantial Change **[ ] – Not a Substantial Change**

Notes/Comments: _____

Final Disposition:

Board of County Commissioners finds proposed modification to be:

[ ] – Substantial Change **[ ] – Not a Substantial Change**

Notes/Comments: _____

Property Owner Letter of Authorization

COUNTY OF OURAY, CO

Re: Zoning/ Permitting – Plan / Design Review Process

I hereby represent that I am the legal owner of the property referenced below, and I hereby give my authorization to T-MOBILE and/or its Agent(s), to act as our Agent(s) in processing and obtaining approval for Building and/or Zoning permits through the COUNTY OF OURAY, CO for the modification of the facility located at the existing wireless communications site described as:

Crown Site ID:	**858480/ZOD_ALLTEL_CO06_FAR_GOLDEN_CRY**
T-MOBILE Site ID:	**DN02489A/**
Site Address:	**MILLION DOLLAR HIGHWAY, RIDGWAY, CO 81432**
APN:	**4515-314-00-003**

Property Owner: GOLDEN CRYSTAL COMPANY

Signature: Donald M Spencer, President

Print Name: Donald M Spencer

Date: 9/22/18

Prepared by, and after recording
Return to:
Md7, LLC
10590 W. Ocean Air Drive, Suite 300
San Diego, CA 92130

Grantor:	Golden Crystal Company	
Grantee:	New Cingular Wireless PCS, LLC	
Legal Description:	Official legal description attached as Exhibit 1	
Tax Serial No.:	4515-314-00-003	
Cell Site Name & #:	Far Golden Crystal / COU6242	Fixed Asset #: 10139830
State:	CO	County: Ouray

MEMORANDUM
OF
LEASE

This Memorandum of Lease is entered into on this 14 day of March, 2014, by and between Golden Crystal Company, a Colorado non-profit corporation, having a mailing address at Attn: Max Spencer, 2180 Sparrow Court, Sarasota, FL 34239 (hereinafter referred to as "**Owner**") and New Cingular Wireless PCS, LLC, a Delaware limited liability company, successor in interest to Alltel Communications, LLC, having a mailing address of 575 Morosgo Drive NE, Suite 13-F West Tower, Atlanta, GA 30324 (hereinafter referred to as "**Tenant**").

1. Owner and Tenant entered into a certain Lease Agreement dated June 3, 2008, as amended by that certain First Amendment to Lease Agreement dated March 14, 2014 (hereinafter, collectively, the "**Lease**") for the purpose of installing, operating and maintaining a communications facility and other improvements at Owner's real property located in the City of Ridgway, County of Ouray, commonly known as Million Dollar Highway. All of the foregoing are set forth in the Lease.

2. The Lease initially commenced on June 1, 2008, and the parties agree to further extend the Lease for a new initial term of three (3) years ("**New Initial Term**") commencing on June 1, 2014. The Term will be automatically renewed unless Tenant notifies Owner in writing of Tenant's intention not to renew the Lease at least sixty (60) days prior to the expiration of the then current Term. Hereafter, the defined term "**Term**" shall include the New Initial Term and any applicable Extension Term. At least sixty (60) days before the end of the New Initial Term of the Lease or any agreed Extension Term, the Owner shall give the Tenant notice of the terms and conditions upon which Owner is willing to extend the Lease for an additional three (3) year period. If the Owner fails to give the required notice in a timely manner, the Lease shall be extended on the then present terms and conditions for an additional three (3) year period. If the required notices are given and the parties fail, by thirty (30) days prior to the end of the then current Term, to agree on the new terms and conditions, the Lease shall terminate. Provided, however, that if termination occurs, either during the New Initial Term or any agreed upon Extension Term, Owner shall extend the lease to twenty-four (24) months from the date of termination to allow Tenant sufficient time to relocate its facilities. Rent shall be prorated accordingly during the twenty-four (24) month extension period.

3. Tenant leases a portion of the real property as more fully described in the Lease.

4. This Memorandum of Lease is not intended to amend or modify, and shall not be deemed or construed as amending or modifying, any of the terms, conditions or provisions of the Lease, all of which are hereby ratified and affirmed. In the event of a conflict between the provisions of this Memorandum of Lease and the provisions of the Lease, the provisions of the Lease shall control. The Lease shall be binding upon and inure to the benefit of the parties and their respective heirs, successors, and assigns, subject to the provisions of the Lease.

[SIGNATURES APPEAR ON THE NEXT PAGE]

IN WITNESS WHEREOF, the parties have executed this Memorandum of Lease as of the day and year first above written.

OWNER:
Golden Crystal Company,
a Colorado non-profit corporation

By: _____
Print Name: Donald M Spencer
Title: Pres
Date: 2-3-2014

TENANT:
New Cingular Wireless PCS, LLC,
a Delaware limited liability company

By: AT&T Mobility Corporation
Its: Manager

By: _____
Print Name: Becky John-Haney
Title: Area Manager
Date: 3-14-14

[ACKNOWLEDGMENTS APPEAR ON THE NEXT PAGE]

OWNER ACKNOWLEDGEMENT

STATE OF FLORIDA)
)ss.
COUNTY OF LEE)

The foregoing instrument was acknowledged before me this 20 day of February 2014, by **Donald M. Spencer**, the **President** of **Golden Crystal Company**, a Colorado non-profit corporation.

Notary Seal

JAMES B. ILTIS, SR.
MY COMMISSION # EE 010381
EXPIRES: August 28, 2014
Bonded Thru Notary Public Underwriters

(Signature of Notary)

My Commission Expires: 8-28-14

TENANT ACKNOWLEDGEMENT

STATE OF COLORADO)
)ss.
COUNTY OF Arapaho)

The foregoing instrument was acknowledged before me this 14 day of march 2014, by Becky John-Hanay, the Area Manager of AT&T Mobility Corporation.

Notary Seal

KALI E BECHER
NOTARY PUBLIC
STATE OF COLORADO
NOTARY ID # 20124056515
MY COMMISSION EXPIRES AUGUST 31, 2016

(Signature of Notary)

My Commission Expires: 8.31.16

Prepared by:
Md7, LLC
10590 W. Ocean Air Drive, Suite 300
San Diego, CA 92130

EXHIBIT 1

DESCRIPTION OF PREMISES

Page 1 of 1

to the Memorandum of Lease dated March 14, 2014, by and between Golden Crystal Company, a Colorado non-profit corporation, as Owner, and New Cingular Wireless PCS, LLC, a Delaware limited liability company, as Tenant.

Street Address: Million Dollar Highway, Ridgway, CO 81432

Tax Serial No.: 4515-314-00-003

That certain Premises (and access and utility easements) on a portion of the real property described as follows:

A portion of the Golden Crystal Lode, M.S. 7050, Ouray County, Colorado described as follows:

Beginning at a point on Line 3-4 of said Golden Crystal Lode whence Corner No. 4 bears North 67'09'34" West 685.49 feet and the southwest corner of said Section 31 bears South 82'53'28" West 3549.52 feet; thence South 22'50'26" West 40.00 feet; thence South 67'09'34" East 40.00 feet; thence North 22'50'26" East 40.00 feet; thence North 67'09'34" West 40.00 feet to the point of beginning.

RECEPTION#: 214432, 07/15/2015 at 02:40:17 PM, 1 OF 2 PAGES,
MICHELLE NAUER, OURAY COUNTY, CO CLERK & RECORDER

Resolution #2015-022

A RESOLUTION OF THE BOARD OF COUNTY COMMISSIONERS OF OURAY COUNTY, COLORADO
APPROVING A SPECIAL USE PERMIT FOR A PUBLIC UTILITY
GOLDEN CRYSTAL MONOPINE COMMUNICATIONS TOWER

WHEREAS, Mark McGarey for Crown Castle, Authorized Agent has applied for approval of a Special Use Permit to operate a *Public Utility* in the Alpine Zone at an unaddressed parcel known as the Golden Crystal mining claim (Golden Crystal – MS 7050) located approximately at latitude: 38° 00' 54.35"N, longitude: 107° 39' 57.59"W; and

WHEREAS, the Ouray County Land Use Code allows a *Pubic Utility* as a use allowed by Special Use Permit in the Valley Zone; and

WHEREAS, this application for public utility seeks to replace existing equipment on the property and includes the construction of a monopine communications tower and equipment cabinet; and

WHEREAS, the equipment that is being replaced will be removed following construction of the new facility; *and*

WHEREAS, the Ouray Area Joint Planning Board reviewed the application, allowed time for public comment, and forwarded the application to the Board of County Commissioners with a unanimous recommendation for approval (with conditions); and

WHEREAS, the Board of County Commissioners (the Board) reviewed the subject application in a properly noticed public hearing on July 7, 2015; and

WHEREAS, the Board heard comments from Land Use Staff, the Applicant, and called for public comment but there was none; and

WHEREAS, the Board noted that a darker color would be preferred for the proposed tower because it would achieve better blending, even after a certain amount of fading has occurred; and

WHEREAS, the Board finds that the application for a Special Use Permit – Public Utility, meets the requirements set forth in Sections 5 of the Ouray County Land Use Code and unanimously approves the subject application with the following conditions:

1. Collocation shall be allowed on the tower to further the goals and policies in the Ouray County Master Plan, by reducing the number of towers in the County
2. The location and construction of the tower and associated equipment shelter shall be as represented in the AT&T design drawings/plans referencing Site Name FAR GOLDEN CRYSTAL, and dated 1/6/15.
3. Prior to construction of the proposed tower and equipment shelter, the applicant shall apply for and receive a building permit.
4. The design and construction of the "monopine" tower shall be as close as possible as is represented in the photos submitted with the application and included in this report.
5. The design and construction of the equipment shelter shall be as close as possible as represented in the photos submitted with the application and included in this report.
6. The color of paint used for the equipment shed shall be approved by Staff at the time of building permit.
7. The colors of the monopine tower shall be approved by Staff.
8. Applicant shall comply with any and all Ouray County regulations contained in the Land Use Code and specifically, the exterior lighting on the equipment shelter shall comply with Section 27 – Outdoor Lighting Regulations.
9. Any future proposed modification to the tower shall include design and location considerations consistent with the *monopine* / camouflage implementation.

10. Any future proposed modification to the tower may require the owner to submit an application for a *Modification to an Existing Telecommunications Facility* and/or an application for an *Amendment to an existing Special Use Permit.*
11. When reviewing the permit for potential renewals, Staff shall review the structure for fading materials and continued compliance to the blending requirements.
12. The Applicant shall provide an updated lease prior to the issuance of a building permit for the tower and/or equipment shelter.

APPROVED AND ADOPTED THIS 14 DAY OF July, 2015, RATIFYING ACTION TAKEN ON JULY 7, 2015.

Voting for: Commissioners Batchelder, Padgett, and Tisdel
Voting against: None

BOARD OF COUNTY COMMISSIONERS OF OURAY COUNTY, COLORADO

Don Batchelder, Chair

Lynn M. Padgett, Vice Chair

Ben Tisdel, Commissioner

Attest:

Michelle Nauer, Clerk and Recorder
By: Hannah Hollenbeck, Deputy Clerk of the Board

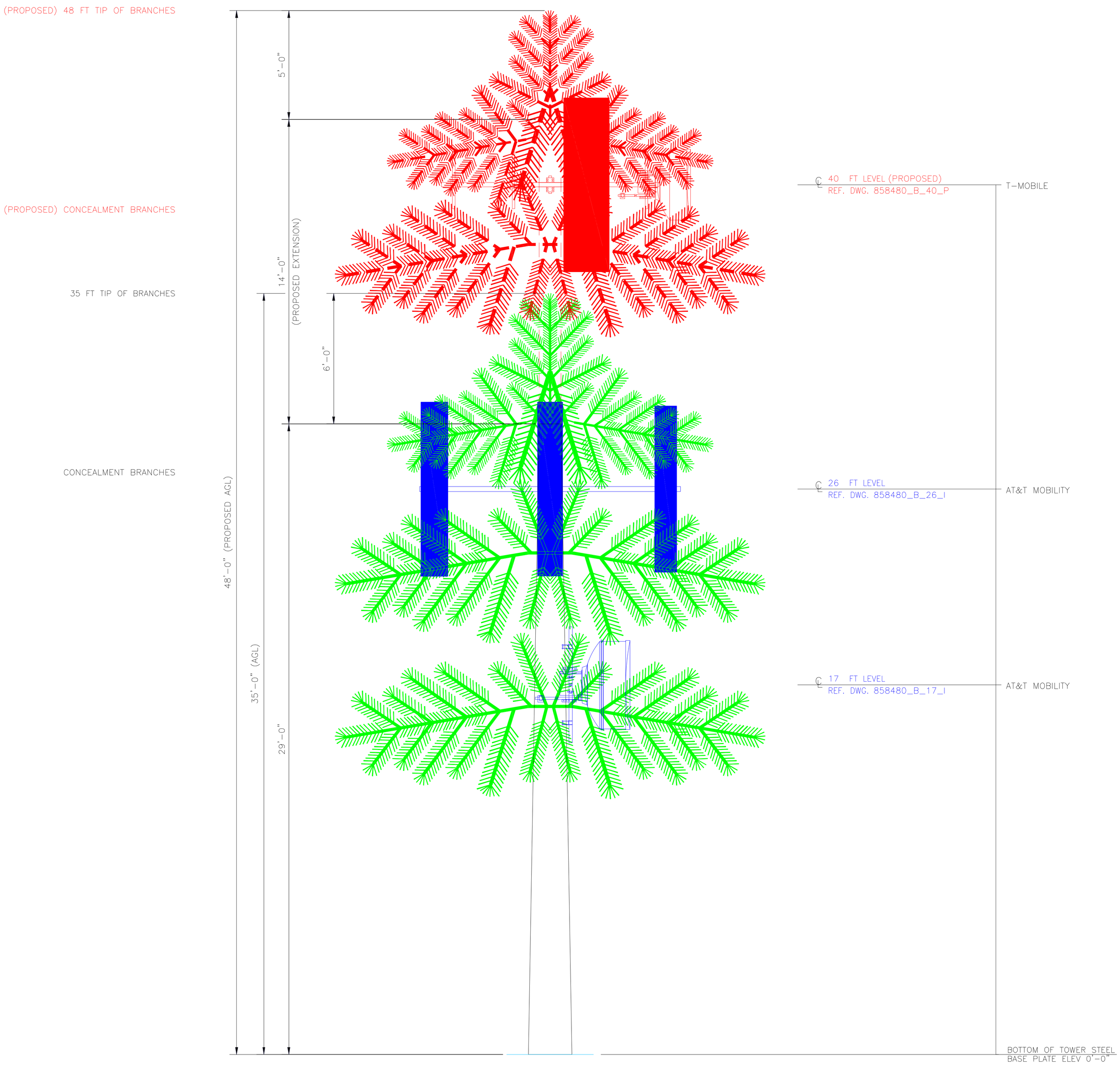
(PROPOSED) 48 FT TIP OF BRANCHES
5'-0"
(PROPOSED) CONCEALMENT BRANCHES
14'-0"
(PROPOSED EXTENSION)
35 FT TIP OF BRANCHES
6'-0"
CONCEALMENT BRANCHES
48'-0" (PROPOSED AGL)
35'-0" (AGL)
29'-0"
℄ 40 FT LEVEL (PROPOSED)
REF. DWG. 858480_B_40_P
T-MOBILE
℄ 26 FT LEVEL
REF. DWG. 858480_B_26_I
AT&T MOBILITY
℄ 17 FT LEVEL
REF. DWG. 858480_B_17_I
AT&T MOBILITY
BOTTOM OF TOWER STEEL
BASE PLATE ELEV 0'-0"

T-Mobile

T-MOBILE SITE NUMBER:	**DN02489A**	**CROWN CASTLE BU #:**	**858480**
T-MOBILE SITE NAME:	**MILLION DOLLAR HWY**	**SITE ADDRESS:**	**MILLION DOLLAR HIGHWAY RIDGWAY, CO 81432**
SITE TYPE:	**CONCEALMENT MONOPOLE**	**COUNTY:**	**OURAY**
TOWER HEIGHT:	**35.0 FT**	**JURISDICTION:**	**COUNTY OF OURAY**

T-MOBILE 2018 NSD LAT: 38° 0' 53.94", LONG: -107° 39' 58.04"

SITE INFORMATION

SITE NAME:	ZOD_ALLTEL_CO06_FAR_GOLDEN_CRY
SITE ADDRESS:	MILLION DOLLAR HIGHWAY RIDGWAY, CO 81432
COUNTY:	OURAY
MAP/PARCEL #:	451531400003 / ACCOUNT N004389
AREA OF CONSTRUCTION:	EXISTING
LATITUDE:	38° 0' 53.94"
LONGITUDE:	-107° 39' 58.04"
LAT/LONG TYPE:	NAD83
GROUND ELEVATION:	8,430 FT
CURRENT ZONING:	----
JURISDICTION:	COUNTY OF OURAY
OCCUPANCY CLASSIFICATION:	U
TYPE OF CONSTRUCTION:	VB
A.D.A. COMPLIANCE:	FACILITY IS UNMANNED AND NOT FOR HUMAN HABITATION
PROPERTY OWNER:	GOLDEN CRYSTAL CO PO BOX 1 OURAY, CO 81427
TOWER OPERATOR:	CROWN CASTLE, USA 2000 CORPORATE DRIVE CANONSBURG, PA 15317
CARRIER/APPLICANT:	T-MOBILE 18400 E. 22ND AVENUE AURORA, CO 80011
CROWN CASTLE APPLICATION ID:	441225
ELECTRIC PROVIDER:	SAN MIGUEL POWER ASSOC (970) 626-5549
TELCO PROVIDER:	---- ----

PROJECT TEAM

DESIGNER FIRM:	BROADUS SERVICES 4 COUNTRY PLACE CIRCLE DALWORTHINGTON GARDENS, TX 76016 PH: (817) 349-3449
ENGINEER FIRM:	JACOB GORALSKI, PLLC 1106 COLBI ST. KENNEDALE, TX 76060 PH: (817) 456-2621 CONTACT: JACOB GORALSKI, PLLC
CROWN CASTLE CONTACTS:	116 INVERNESS DR. EAST STE# 280 ENGLEWOOD, CO 80112 GRANT STEINHAUSER - PROJECT MANAGER GRANT.STEINHAUSER@CROWNCASTLE.COM (720) 450-3009 WALT RAYPOLE - CONSTRUCTION MANAGER WALT.RAYPOLE@CROWNCASTLE.COM (719) 466-9629 BRANDON SAENZ - A&E PROJECT MANAGER BRANDON.SAENZ.CONTRACTOR@CROWNCASTLE.COM (720) 450-3003
T-MOBILE CONTACTS :	MACKENZIE KEYS - MACKENZIE.KEYS2@T-MOBILE.COM

DRAWING INDEX

SHEET #	SHEET DESCRIPTION
T-1	TITLE SHEET
T-2	GENERAL NOTES
C-1.1	OVERALL SITE PLAN
C-1.2	FINAL SITE PLAN
C-1.3	EQUIPMENT PLAN & DIMENSION PLAN
C-2	TOWER ELEVATION & ANTENNA PLAN
C-3	EQUIPMENT ELEVATION
C-4	PLUMBING & CABLE SPECIFICATIONS
C-5	EQUIPMENT DETAILS
C-6	EQUIPMENT DETAILS
C-7	EQUIPMENT DETAILS
C-8	EQUIPMENT DETAILS
C-9	MOUNT SPECIFICATION
E-1	ELECTRICAL PLAN
E-2	ELECTRICAL SPECIFICATIONS
G-1	EQUIPMENT AND ANTENNA GROUNDING PLAN
G-2	GROUNDING DETAILS
G-3	GROUNDING DETAILS

ALL DRAWINGS CONTAINED HEREIN ARE FORMATTED FOR FULL SIZE. CONTRACTOR SHALL VERIFY ALL PLANS AND EXISTING DIMENSIONS AND CONDITIONS ON THE JOB SITE AND SHALL IMMEDIATELY NOTIFY THE ENGINEER IN WRITING OF ANY DISCREPANCIES BEFORE PROCEEDING WITH THE WORK OR BE RESPONSIBLE FOR SAME.

PROJECT DESCRIPTION

THE PURPOSE OF THIS PROJECT IS TO PROPOSE AN ANTENNA MODIFICATION ON AN EXISTING WIRELESS SITE.

TOWER SCOPE OF WORK:

- INSTALL (3) PANEL ANTENNAS
- INSTALL (3) RRUs
- INSTALL (1) COVP
- INSTALL (1) HYBRID CABLE LINES
- INSTALL (3) NEW T-ARMS MOUNTS
- INSTALL (1) MICROWAVE ANTENNA
- INSTALL (1) ODU
- INSTALL (1) 1/2" COAX CABLE

GROUND SCOPE OF WORK:

- INSTALLATION OF NEW 10'-0"x12'-0" MODULAR EQUIPMENT PLATFORM WITHIN A NEW 10'-0"x15'-0" LEASE AREA WITHIN THE EXISTING FENCED COMPOUND

DESIGN PACKAGE BASED ON THE RFDS
REVISION: R0.1
DATE: 4/17/2018 3:26:21 PM

DESIGN PACKAGE BASED ON THE APPLICATION
ID: 441225
REVISION: 2

LOCATION MAP

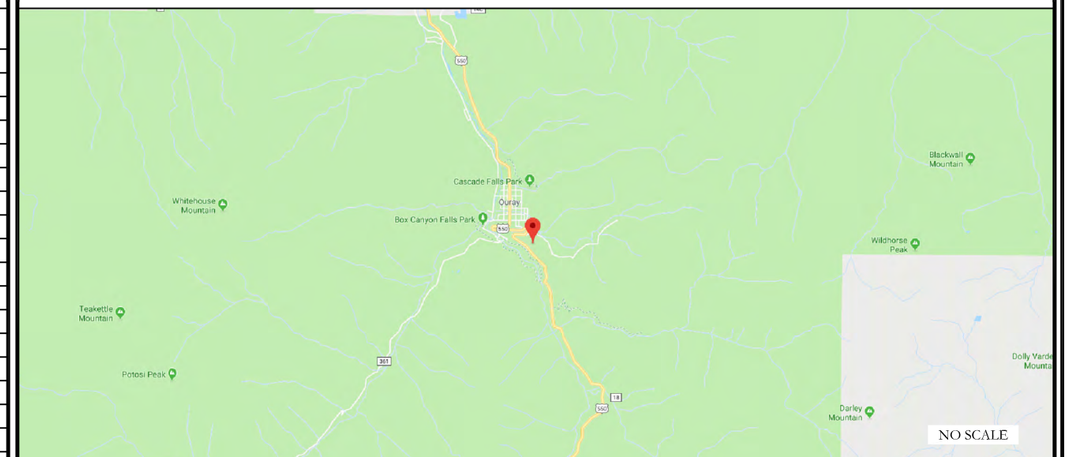

DRIVING DIRECTIONS FROM T-MOBILE LOCAL OFFICE (18400 E. 22ND AVENUE AURORA, CO 80011): HEAD EAST ON E 22ND AVE TOWARD TOWER RD TURN LEFT AT THE 1ST CROSS STREET ONTO TOWER RD USE THE LEFT 2 LANES TO TURN LEFT TO MERGE ONTO I-70 W MERGE ONTO I-70 W USE THE RIGHT 2 LANES TO TAKE EXIT 260 FOR 470 TOWARD COLORADO SPRINGS MERGE ONTO CO-470 E TAKE THE EXIT ONTO US-285 S/US HWY 285 S TOWARD FAIRPLAY KEEP LEFT TO CONTINUE ON US HWY 285 S CONTINUE ONTO US HWY 285 S TURN RIGHT ONTO US-50 W TURN LEFT ONTO HILLCREST DR AT THE TRAFFIC CIRCLE, TAKE THE 1ST EXIT ONTO SUNNYSIDE RD TURN LEFT ONTO S 12TH ST TURN LEFT ONTO US-550 S/S TOWNSEND AVE MILLION DOLLAR HWY RIDGWAY, CO 81432

APPLICABLE CODES/REFERENCE DOCUMENTS

ALL WORK SHALL BE PERFORMED AND MATERIALS INSTALLED IN ACCORDANCE WITH THE CURRENT EDITIONS OF THE FOLLOWING CODES AS ADOPTED BY THE LOCAL GOVERNING AUTHORITIES. NOTHING IN THESE PLANS IS TO BE CONSTRUED TO PERMIT WORK NOT CONFORMING TO THESE CODES:

CODE TYPE	CODE
BUILDING	2012 IBC
MECHANICAL	2012 IMC
ELECTRICAL	2014 NEC

REFERENCE DOCUMENTS:

STRUCTURAL ANALYSIS: BY OTHERS

MOUNT ANALYSIS: BY OTHERS

CALL COLORADO ONE CALL
(800) 922-1987
CALL 3 WORKING DAYS
BEFORE YOU DIG!

SITE PHOTO

T-Mobile
18400 E. 22ND AVENUE
AURORA, CO 80011

CROWN CASTLE
116 INVERNESS DR. EAST STE# 280
ENGLEWOOD, CO 80112

T-MOBILE SITE NUMBER:
DN02489A

BU #: **858480**
ZOD_ALLTEL_CO06
_FAR_GOLDEN_CRY

MILLION DOLLAR HIGHWAY
RIDGWAY, CO 81432

EXISTING 35.0 FT
MONOPOLE

ISSUED FOR:

REV	DATE	DRWN	DESCRIPTION	DES./QA
A	07-9-2018	JAS	PRELIMINARY	ELG
B	08-20-2018	JAS	PRELIMINARY	ELG
0	08-28-2018	JAS	CONSTRUCTION	ELG
1	10-30-2018	JAS	CONSTRUCTION	ELG
2	12-13-2018	JAS	CONSTRUCTION	ELG
3	03-29-2019	JAS	CONSTRUCTION	ELG
4	04-18-2019	JAS	CONSTRUCTION	ELG

COLORADO LICENSED
JACOB GORALSKI
PE.0049661
PROFESSIONAL ENGINEER

5/7/2019

JACOB GORALSKI, PLLC
CONSULTING ENGINEER
JACOB GORALSKI, PLLC
CO PE# 0049661
1106 COLBI ST.
KENNEDALE, TX 76060
(817) 456-2621

IT IS A VIOLATION OF LAW FOR ANY PERSON, UNLESS THEY ARE ACTING UNDER THE DIRECTION OF A LICENSED PROFESSIONAL ENGINEER, TO ALTER THIS DOCUMENT.

SHEET NUMBER: T-1

REVISION: 4

SITE WORK GENERAL NOTES:

1. THE SUBCONTRACTOR SHALL CONTACT UTILITY LOCATING SERVICES PRIOR TO THE START OF CONSTRUCTION.
2. ALL EXISTING ACTIVE SEWER, WATER, GAS, ELECTRIC AND OTHER UTILITIES WHERE ENCOUNTERED IN THE WORK, SHALL BE PROTECTED AT ALL TIMES AND WHERE REQUIRED FOR THE PROPER EXECUTION OF THE WORK, SHALL BE RELOCATED AS DIRECTED BY CONTRACTOR. EXTREME CAUTION SHOULD BE USED BY THE SUBCONTRACTOR WHEN EXCAVATING OR DRILLING PIERS AROUND OR NEAR UTILITIES, SUBCONTRACTOR SHALL PROVIDE SAFETY TRAINING FOR THE WORKING CREW. THIS WILL INCLUDE BUT NOT BE LIMITED TO A) FALL PROTECTION B) CONFINED SPACE C) ELECTRICAL SAFETY D) TRENCHING AND EXCAVATION.
3. ALL SITE WORK TO COMPLY WITH QAS-STD-10068 "INSTALLATION STANDARDS FOR CONSTRUCTION ACTIVITIES ON CROWN CASTLE TOWER SITE" AND LATEST VERSION OF TIA 1019 "STANDARD FOR INSTALLATION, ALTERATION, AND MAINTENANCE OF ANTENNA SUPPORTING STRUCTURES AND ANTENNAS."
4. ALL SITE WORK SHALL BE AS INDICATED ON THE STAMPED CONSTRUCTION DRAWINGS AND PROJECT SPECIFICATIONS.
5. IF NECESSARY, RUBBISH, STUMPS, DEBRIS, STICKS, STONES AND OTHER REFUSE SHALL BE REMOVED FROM THE SITE AND DISPOSED OF LEGALLY.
6. ALL EXISTING INACTIVE SEWER, WATER, GAS, ELECTRIC AND OTHER UTILITIES, WHICH INTERFERE WITH THE EXECUTION OF THE WORK, SHALL BE REMOVED AND/OR CAPPED, PLUGGED OR OTHERWISE DISCONTINUED AT POINTS WHICH WILL NOT INTERFERE WITH THE EXECUTION OF THE WORK, SUBJECT TO THE APPROVAL OF CONTRACTOR, OWNER AND/OR LOCAL UTILITIES.
7. THE SUBCONTRACTOR SHALL PROVIDE SITE SIGNAGE IN ACCORDANCE WITH THE TECHNICAL SPECIFICATION FOR SITE SIGNAGE.
8. THE SITE SHALL BE GRADED TO CAUSE SURFACE WATER TO FLOW AWAY FROM THE BTS EQUIPMENT AND TOWER AREAS.
9. NO FILL OR EMBANKMENT MATERIAL SHALL BE PLACED ON FROZEN GROUND. FROZEN MATERIALS, SNOW OR ICE SHALL NOT BE PLACED IN ANY FILL OR EMBANKMENT.
10. THE SUB GRADE SHALL BE COMPACTED AND BROUGHT TO A SMOOTH UNIFORM GRADE PRIOR TO FINISHED SURFACE APPLICATION.
11. THE AREAS OF THE OWNERS PROPERTY DISTURBED BY THE WORK AND NOT COVERED BY THE TOWER, EQUIPMENT OR DRIVEWAY, SHALL BE GRADED TO A UNIFORM SLOPE, AND STABILIZED TO PREVENT EROSION AS SPECIFIED ON THE PROJECT SPECIFICATIONS.
12. SUBCONTRACTOR SHALL MINIMIZE DISTURBANCE TO EXISTING SITE DURING CONSTRUCTION. EROSION CONTROL MEASURES, IF REQUIRED DURING CONSTRUCTION, SHALL BE IN CONFORMANCE WITH THE LOCAL GUIDELINES FOR EROSION AND SEDIMENT CONTROL.
13. NOTICE TO PROCEED- NO WORK TO COMMENCE PRIOR TO COMPANY'S WRITTEN NOTICE TO PROCEED AND THE ISSUANCE OF A PURCHASE ORDER.
14. ALL CONSTRUCTION MEANS AND METHODS; INCLUDING BUT NOT LIMITED TO, ERECTION PLANS, RIGGING PLANS, CLIMBING PLANS, AND RESCUE PLANS SHALL BE THE RESPONSIBILITY OF THE GENERAL CONTRACTOR RESPONSIBLE FOR THE EXECUTION OF THE WORK CONTAINED HEREIN AND SHALL MEET ANSI/TIA 1019 (LATEST EDITION), OSHA, AND GENERAL INDUSTRY STANDARDS. ALL RIGGING PLANS SHALL ADHERE TO ANSI/TIA-1019 (LATEST EDITION) INCLUDING THE REQUIRED INVOLVEMENT OF A QUALIFIED ENGINEER FOR CLASS IV CONSTRUCTION.

STRUCTURAL STEEL NOTES:

1. ALL STEEL WORK SHALL BE PAINTED IN ACCORDANCE WITH THE PROJECT SPECIFICATIONS AND IN ACCORDANCE WITH ASTM A36 UNLESS OTHERWISE NOTED.
2. BOLTED CONNECTIONS SHALL BE ASTM A325 BEARING TYPE (3/4"ø) CONNECTIONS AND SHALL HAVE MINIMUM OF TWO BOLTS UNLESS NOTED OTHERWISE.
3. NON-STRUCTURAL CONNECTIONS FOR STEEL GRATING MAY USE 5/8"ø ASTM A307 BOLTS UNLESS NOTED OTHERWISE.
4. INSTALLATION OF CONCRETE EXPANSION/WEDGE ANCHOR, SHALL BE PER MANUFACTURER'S RECOMMENDED PROCEDURE. THE ANCHOR BOLT, DOWEL OR ROD SHALL CONFORM TO MANUFACTURER'S RECOMMENDATION FOR EMBEDMENT DEPTH OR AS SHOWN ON THE DRAWINGS. NO REBAR SHALL BE CUT WITHOUT PRIOR CONTRACTOR APPROVAL WHEN DRILLING HOLES IN CONCRETE. SPECIAL INSPECTIONS, REQUIRED BY GOVERNING CODES, SHALL BE PERFORMED IN ORDER TO MAINTAIN MANUFACTURER'S MAXIMUM ALLOWABLE LOADS.

CONCRETE AND REINFORCING STEEL NOTES:

1. ALL CONCRETE WORK SHALL BE IN ACCORDANCE WITH THE ACI 301, ACI 318, ACI 336, ASTM A184, ASTM A185 AND THE DESIGN AND CONSTRUCTION SPECIFICATION FOR CAST-IN-PLACE CONCRETE.
2. ALL CONCRETE SHALL HAVE A MINIMUM COMPRESSIVE STRENGTH OF 3000 PSI AT 28 DAYS, UNLESS NOTED OTHERWISE. SLAB FOUNDATION DESIGN ASSUMING ALLOWABLE SOIL BEARING PRESSURE OF 2000 PSF.
3. REINFORCING STEEL SHALL CONFORM TO ASTM A615, GRADE 60, DEFORMED UNLESS NOTED OTHERWISE. WELDED WIRE FABRIC SHALL CONFORM TO ASTM A185 WELDED STEEL WIRE FABRIC UNLESS NOTED OTHERWISE. SPLICES SHALL BE CLASS "B" AND ALL HOOKS SHALL BE STANDARD, UNO.
4. THE FOLLOWING MINIMUM CONCRETE COVER SHALL BE PROVIDED FOR REINFORCING STEEL UNLESS SHOWN OTHERWISE ON DRAWINGS:

   CONCRETE CAST AGAINST EARTH.....3 IN.
   CONCRETE EXPOSED TO EARTH OR WEATHER:
   #6 AND LARGER.....2 IN.
   #5 AND SMALLER & WWF.....1 1/2 IN.
   CONCRETE NOT EXPOSED TO EARTH OR WEATHER OR NOT CAST AGAINST THE GROUND:
   SLAB AND WALLS.....3/4 IN.
   BEAMS AND COLUMNS.....1 1/2 IN.

5. A CHAMFER 3/4" SHALL BE PROVIDED AT ALL EXPOSED EDGES OF CONCRETE, UNLESS NOTED OTHERWISE. IN ACCORDANCE WITH ACI 301 SECTION 4.2.4.

MASONRY NOTES:

1. HOLLOW CONCRETE MASONRY UNITS SHALL MEET A.S.T.M. SPECIFICATION C90, GRADE N. TYPE 1. THE SPECIFIED DESIGN COMPRESSIVE STRENGTH OF CONCRETE MASONRY (F'm) SHALL BE 1500 PSI.
2. MORTAR SHALL MEET THE PROPERTY SPECIFICATION OF A.S.T.M. C270 TYP. "S" MORTAR AND SHALL HAVE A MINIMUM COMPRESSIVE STRENGTH OF 2000 PSI.
3. GROUT SHALL MEET A.S.T.M. SPECIFICATION C475 AND HAVE A MINIMUM 28 DAY COMPRESSIVE STRENGTH OF 2000 PSI.
4. CONCRETE MASONRY SHALL BE LAID IN RUNNING (COMMON) BOND.
5. WALL SHALL RECEIVE TEMPORARY BRACING. TEMPORARY BRACING SHALL NOT BE REMOVED UNTIL GROUT IS FULLY CURED.

GENERAL NOTES:

1. FOR THE PURPOSE OF CONSTRUCTION DRAWING, THE FOLLOWING DEFINITIONS SHALL APPLY:

CONTRACTOR-	
SUBCONTRACTOR-	GENERAL CONTRACTOR (CONSTRUCTION)
CARRIER-	T-MOBILE
TOWER OWNER-	CROWN CASTLE
OEM-	ORIGINAL EQUIPMENT MANUFACTURER

2. PRIOR TO THE SUBMISSION OF BIDS, THE BIDDING SUBCONTRACTOR SHALL VISIT THE CELL SITE TO FAMILIARIZE WITH THE EXISTING CONDITIONS AND TO CONFIRM THAT THE WORK CAN BE ACCOMPLISHED AS SHOWN ON THE CONSTRUCTION DRAWINGS. ANY DISCREPANCY FOUND SHALL BE BROUGHT TO THE ATTENTION OF CONTRACTOR AND CROWN CASTLE.
3. ALL MATERIALS FURNISHED AND INSTALLED SHALL BE IN STRICT ACCORDANCE WITH ALL APPLICABLE CODES, REGULATIONS AND ORDINANCES. SUBCONTRACTOR SHALL ISSUE ALL APPROPRIATE NOTICES AND COMPLY WITH ALL LAWS, ORDINANCES, RULES, REGULATIONS AND LAWFUL ORDERS OF ANY PUBLIC AUTHORITY REGARDING THE PERFORMANCE OF THE WORK. ALL WORK CARRIED OUT SHALL COMPLY WITH ALL APPLICABLE MUNICIPAL AND UTILITY COMPANY SPECIFICATIONS AND LOCAL JURISDICTIONAL CODES, ORDINANCES AND APPLICABLE REGULATIONS.
4. DRAWINGS PROVIDED HERE ARE NOT TO SCALE AND ARE INTENDED TO SHOW OUTLINE ONLY.
5. UNLESS NOTED OTHERWISE, THE WORK SHALL INCLUDE FURNISHING MATERIALS, EQUIPMENT, APPURTENANCES AND LABOR NECESSARY TO COMPLETE ALL INSTALLATIONS AS INDICATED ON THE DRAWINGS.
6. "KITTING LIST" SUPPLIED WITH THE BID PACKAGE IDENTIFIES ITEMS THAT WILL BE SUPPLIED BY CONTRACTOR. ITEMS NOT INCLUDED IN THE BILL OF MATERIALS AND KITTING LIST SHALL BE SUPPLIED BY THE SUBCONTRACTOR.
7. THE SUBCONTRACTOR SHALL INSTALL ALL EQUIPMENT AND MATERIALS IN ACCORDANCE WITH MANUFACTURER'S RECOMMENDATIONS UNLESS SPECIFICALLY STATED OTHERWISE.
8. IF THE SPECIFIED EQUIPMENT CAN NOT BE INSTALLED AS SHOWN ON THESE DRAWINGS, THE SUBCONTRACTOR SHALL PROPOSE AN ALTERNATIVE INSTALLATION FOR APPROVAL BY THE CONTRACTOR AND CROWN CASTLE PRIOR TO PROCEEDING WITH ANY SUCH CHANGE OF INSTALLATION.
9. SUBCONTRACTOR SHALL DETERMINE ACTUAL ROUTING OF CONDUIT, POWER AND T1 CABLES, GROUNDING CABLES AS SHOWN ON THE POWER, GROUNDING AND TELCO PLAN DRAWINGS.
10. THE SUBCONTRACTOR SHALL PROTECT EXISTING IMPROVEMENTS, PAVEMENTS, CURBS, LANDSCAPING AND STRUCTURES. ANY DAMAGED PART SHALL BE REPAIRED AT SUBCONTRACTOR'S EXPENSE TO THE SATISFACTION OF OWNER.
11. SUBCONTRACTOR SHALL LEGALLY AND PROPERLY DISPOSE OF ALL SCRAP MATERIALS SUCH AS COAXIAL CABLES AND OTHER ITEMS REMOVED FROM THE EXISTING FACILITY. ANTENNAS REMOVED SHALL BE RETURNED TO THE OWNER'S DESIGNATED LOCATION.
12. SUBCONTRACTOR SHALL LEAVE PREMISES IN CLEAN CONDITION. TRASH AND DEBRIS SHOULD BE REMOVED FROM SITE ON A DAILY BASIS.

ABBREVIATIONS AND SYMBOLS:

ABBREVIATIONS:

AGL	ABOVE GRADE LEVEL
BTS	BASE TRANSCEIVER STATION
(E)	EXISTING
MIN.	MINIMUM
REF	REFERENCE
RF	RADIO FREQUENCY
T.B.D.	TO BE DETERMINED
T.B.R.	TO BE RESOLVED
TYP	TYPICAL
REQ	REQUIRED
EGR	EQUIPMENT GROUND RING
AWG	AMERICAN WIRE GAUGE
MGB	MASTER GROUND BAR
EG	EQUIPMENT GROUND
BCW	BARE COPPER WIRE
BTCW	BARE TINNED COPPER WIRE
SIAD	SMART INTEGRATED ACCESS DEVICE
GEN	GENERATOR
IGR	INTERIOR GROUND RING (HALO)
RBS	RADIO BASE STATION

SYMBOLS:

S/G	SOLID GROUND BUS BAR
S/N	SOLID NEUTRAL BUS BAR
	SUPPLEMENTAL GROUND CONDUCTOR
	2-POLE THERMAL-MAGNETIC CIRCUIT BREAKER
	SINGLE-POLE THERMAL-MAGNETIC CIRCUIT BREAKER
	CHEMICAL GROUND ROD
	TEST WELL
	DISCONNECT SWITCH
	METER
	EXOTHERMIC WELD (CADWELD) (UNLESS OTHERWISE NOTED)
	MECHANICAL CONNECTION
	GROUNDING WIRE

ELECTRICAL INSTALLATION NOTES:

1. ALL ELECTRICAL WORK SHALL BE PERFORMED IN ACCORDANCE WITH THE PROJECT SPECIFICATIONS, NEC AND ALL APPLICABLE FEDERAL, STATE, AND LOCAL CODES/ORDINANCES.
2. CONDUIT ROUTINGS ARE SCHEMATIC. SUBCONTRACTOR SHALL INSTALL CONDUITS SO THAT ACCESS TO EQUIPMENT IS NOT BLOCKED AND TRIP HAZARDS ARE ELIMINATED.
3. WIRING, RACEWAY AND SUPPORT METHODS AND MATERIALS SHALL COMPLY WITH THE REQUIREMENTS OF THE NEC. HILTI EPOXY ANCHORS ARE REQUIRED BY CROWN CASTLE.
4. ALL CIRCUITS SHALL BE SEGREGATED AND MAINTAIN MINIMUM CABLE SEPARATION AS REQUIRED BY THE NEC.
5. CABLES SHALL NOT BE ROUTED THROUGH LADDER-STYLE CABLE TRAY RUNGS.
6. EACH END OF EVERY POWER, POWER PHASE CONDUCTOR (I.E., HOTS), GROUNDING AND T1 CONDUCTOR AND CABLE SHALL BE LABELED WITH COLOR-CODED INSULATION OR ELECTRICAL TAPE (3M BRAND, 1/2" PLASTIC ELECTRICAL TAPE WITH UV PROTECTION, OR EQUAL). THE IDENTIFICATION METHOD SHALL CONFORM WITH NEC AND OSHA.
7. ALL ELECTRICAL COMPONENTS SHALL BE CLEARLY LABELED WITH PLASTIC TAPE PER COLOR SCHEDULE. ALL EQUIPMENT SHALL BE LABELED WITH THEIR VOLTAGE RATING, PHASE CONFIGURATION, WIRE CONFIGURATION, POWER OR AMPACITY RATING AND BRANCH CIRCUIT ID NUMBERS (I.E. PANEL BOARD AND CIRCUIT ID'S).
8. PANEL BOARDS (ID NUMBERS) AND INTERNAL CIRCUIT BREAKERS (CIRCUIT ID NUMBERS) SHALL BE CLEARLY LABELED WITH PLASTIC LABELS.
9. ALL TIE WRAPS SHALL BE CUT FLUSH WITH APPROVED CUTTING TOOL TO REMOVE SHARP EDGES.
10. POWER, CONTROL AND EQUIPMENT GROUND WIRING IN TUBING OR CONDUIT SHALL BE SINGLE CONDUCTOR (#14 AWG OR LARGER), 600 V, OIL RESISTANT THHN OR THWN-2, CLASS B STRANDED COPPER CABLE RATED FOR 90° C (WET & DRY) OPERATION LISTED OR LABELED FOR THE LOCATION AND RACEWAY SYSTEM USED UNLESS OTHERWISE SPECIFIED.
11. SUPPLEMENTAL EQUIPMENT GROUND WIRING LOCATED INDOORS SHALL BE SINGLE CONDUCTOR (#6 AWG OR LARGER), 600V, OIL RESISTANT THHN OR THWN-2 GREEN INSULATION CLASS B STRANDED COPPER CABLE RATED FOR 90° C (WET AND DRY) OPERATION LISTED OR LABELED FOR THE LOCATION AND RACEWAY SYSTEM USED UNLESS OTHERWISE SPECIFIED.
12. POWER AND CONTROL WIRING, NOT IN TUBING OR CONDUIT, SHALL BE MULTI-CONDUCTOR, TYPE TC CABLE (#14 AWG OR LARGER), 600 V, OIL RESISTANT THHN OR THWN-2, CLASS B STRANDED COPPER CABLE RATED FOR 90° C (WET AND DRY) OPERATION WITH OUTER JACKET LISTED OR LABELED FOR THE LOCATION USED UNLESS OTHERWISE SPECIFIED.
13. ALL POWER AND GROUNDING CONNECTIONS SHALL BE CRIMP-STYLE, COMPRESSION WIRE LUGS AND WIRE NUTS BY THOMAS AND BETTS (OR EQUAL). LUGS AND WIRE NUTS SHALL BE RATED FOR OPERATION AT NO LESS THAN 75° C (90° C IF AVAILABLE).
14. RACEWAY AND CABLE TRAY SHALL BE LISTED OR LABELED FOR ELECTRICAL USE IN ACCORDANCE WITH NEMA, UL, ANSI/IEEE AND NEC.
15. ELECTRICAL METALLIC TUBING (EMT) OR RIGID NONMETALLIC CONDUIT (I.E. RIGID PVC SCHEDULE 40 OR RIGID PVC SCHEDULE 80 FOR LOCATIONS SUBJECT TO PHYSICAL DAMAGE) SHALL BE USED FOR EXPOSED INDOOR LOCATIONS.
16. ELECTRICAL METALLIC TUBING (EMT), ELECTRICAL NONMETALLIC TUBING (ENT) OR RIGID NONMETALLIC CONDUIT (RIGID PVC, SCHEDULE 40) SHALL BE USED FOR CONCEALED INDOOR LOCATIONS.
17. SCHEDULE 40 PVC UNDERGROUND ON STRAIGHTS AND SCHEDULE 80 PVC FOR ALL ELBOWS/90s AND ALL APPROVED ABOVE GRADE PVC CONDUIT.
18. LIQUID-TIGHT FLEXIBLE METALLIC CONDUIT (LIQUID-TITE FLEX) SHALL BE USED INDOORS AND OUTDOORS, WHERE VIBRATION OCCURS OR FLEXIBILITY IS NEEDED.
19. CONDUIT AND TUBING FITTINGS SHALL BE THREADED OR COMPRESSION-TYPE AND APPROVED FOR THE LOCATION USED. SET SCREW FITTINGS ARE NOT ACCEPTABLE.
20. CABINETS, BOXES AND WIRE WAYS SHALL BE LABELED FOR ELECTRICAL USE IN ACCORDANCE WITH NEMA, UL, ANSI/IEEE AND NEC.
21. WIREWAYS SHALL BE EPOXY-COATED (GRAY) AND INCLUDE A HINGED COVER, DESIGNED TO SWING OPEN DOWNWARDS; SHALL BE PANDUIT TYPE E (OR EQUAL); AND RATED NEMA 1 (OR BETTER).
22. CONDUITS SHALL BE FASTENED SECURELY IN PLACE WITH APPROVED NON-PERFORATED STRAPS AND HANGERS. EXPLOSIVE DEVICES FOR ATTACHING HANGERS TO STRUCTURE WILL NOT BE PERMITTED. CLOSELY FOLLOW THE LINES OF THE STRUCTURE, MAINTAIN CLOSE PROXIMITY TO THE STRUCTURE AND KEEP CONDUITS IN TIGHT ENVELOPES. CHANGES IN DIRECTION TO ROUTE AROUND OBSTACLES SHALL BE MADE WITH CONDUIT OUTLET BODIES. CONDUIT SHALL BE INSTALLED IN A NEAT AND WORKMANLIKE MANNER. PARALLEL AND PERPENDICULAR TO STRUCTURE WALL AND CEILING LINES. ALL CONDUIT SHALL BE FISHED TO CLEAR OBSTRUCTIONS. ENDS OF CONDUITS SHALL BE TEMPORARILY CAPPED FLUSH TO FINISH GRADE TO PREVENT CONCRETE, PLASTER OR DIRT FROM ENTERING. CONDUITS SHALL BE RIGIDLY CLAMPED TO BOXES BY GALVANIZED MALLEABLE IRON BUSHIN ON INSIDE AND GALVANIZED MALLEABLE IRON LOCKNUT ON OUTSIDE AND INSIDE.
23. EQUIPMENT CABINETS, TERMINAL BOXES, JUNCTION BOXES AND PULL BOXES SHALL BE GALVANIZED OR EPOXY-COATED SHEET STEEL; SHALL MEET OR EXCEED UL 50 AND RATED NEMA 1 (OR BETTER) INDOORS OR NEMA 3R (OR BETTER) OUTDOORS.
24. METAL RECEPTACLE, SWITCH AND DEVICE BOXES SHALL BE GALVANIZED, EPOXY-COATED OR NON-CORRODING; SHALL MEET OR EXCEED UL 514A AND NEMA OS 1; AND RATED NEMA 1 (OR BETTER) INDOORS OR WEATHER PROTECTED (WP OR BETTER) OUTDOORS.
25. NONMETALLIC RECEPTACLE, SWITCH AND DEVICE BOXES SHALL MEET OR EXCEED NEMA OS 2; AND RATED NEMA 1 (OR BETTER) INDOORS OR WEATHER PROTECTED (WP OR BETTER) OUTDOORS.
26. THE SUBCONTRACTOR SHALL NOTIFY AND OBTAIN NECESSARY AUTHORIZATION FROM THE CONTRACTOR BEFORE COMMENCING WORK ON THE AC POWER DISTRIBUTION PANELS.
27. THE SUBCONTRACTOR SHALL PROVIDE NECESSARY TAGGING ON THE BREAKERS, CABLES AND DISTRIBUTION PANELS IN ACCORDANCE WITH THE APPLICABLE CODES AND STANDARDS TO SAFEGUARD LIFE AND PROPERTY.
28. INSTALL PLASTIC LABEL ON THE METER CENTER TO SHOW "T-MOBILE".
29. ALL CONDUITS THAT ARE INSTALLED ARE TO HAVE A METERED MULE TAPE PULL CORD INSTALLED.
30. INSTALL PULL BOXES TO THE MAIN SERVICE FEEDER CONDUIT RUN, AS NEEDED TO COMPLY WITH NEC AND UTILITY COMPANY REQUIREMENTS

GREENFIELD GROUNDING NOTES:

1. ALL GROUND ELECTRODE SYSTEMS (INCLUDING TELECOMMUNICATION, RADIO, LIGHTNING PROTECTION AND AC POWER GES'S) SHALL BE BONDED TOGETHER AT OR BELOW GRADE, BY TWO OR MORE COPPER BONDING CONDUCTORS IN ACCORDANCE WITH THE NEC.
2. THE SUBCONTRACTOR SHALL PERFORM IEEE FALL-OF-POTENTAL RESISTANCE TO EARTH TESTING (PER IEEE 1100 AND 81) FOR GROUND ELECTRODE SYSTEMS, THE SUBCONTRACTOR SHALL FURNISH AND INSTALL SUPPLEMENTAL GROUND ELECTRODES AS NEEDED TO ACHIEVE A TEST RESULT OF 5 OHMS OR LESS.
3. THE SUBCONTRACTOR IS RESPONSIBLE FOR PROPERLY SEQUENCING GROUNDING AND UNDERGROUND CONDUIT INSTALLATION AS TO PREVENT ANY LOSS OF CONTINUITY IN THE GROUNDING SYSTEM OR DAMAGE TO THE CONDUIT AND PROVIDE TESTING RESULTS.
4. METAL CONDUIT AND TRAY SHALL BE GROUNDED AND MADE ELECTRICALLY CONTINUOUS WITH LISTED BONDING FITTINGS OR BY BONDING ACROSS THE DISCONTINUITY WITH #6 AWG COPPER WIRE UL APPROVED GROUNDING TYPE CONDUIT CLAMPS.
5. METAL RACEWAY SHALL NOT BE USED AS THE NEC REQUIRED EQUIPMENT GROUND CONDUCTOR. STRANDED COPPER CONDUCTORS WITH GREEN INSULATION, SIZED IN ACCORDANCE WITH THE NEC, SHALL BE FURNISHED AND INSTALLED WITH THE POWER CIRCUITS TO BTS EQUIPMENT.
6. EACH CABINET FRAME SHALL BE DIRECTLY CONNECTED TO THE MASTER GROUND BAR WITH GREEN INSULATED SUPPLEMENTAL EQUIPMENT GROUND WIRES, 6 AWG STRANDED COPPER OR LARGER FOR INDOOR BTS; #2 AWG SOLID TINNED COPPER FOR OUTDOOR BTS.
7. CONNECTIONS TO THE GROUND BUS SHALL NOT BE DOUBLED UP OR STACKED BACK TO BACK CONNECTIONS ON OPPOSITE SIDE OF THE GROUND BUS ARE PERMITTED.
8. ALL EXTERIOR GROUND CONDUCTORS BETWEEN EQUIPMENT/GROUND BARS AND THE GROUND RING SHALL BE #2 AWG SOLID TINNED COPPER UNLESS OTHERWISE INDICATED.
9. ALUMINUM CONDUCTOR OR COPPER CLAD STEEL CONDUCTOR SHALL NOT BE USED FOR GROUNDING CONNECTIONS.
10. USE OF 90° BENDS IN THE PROTECTION GROUNDING CONDUCTORS SHALL BE AVOIDED WHEN 45° BENDS CAN BE ADEQUATELY SUPPORTED.
11. EXOTHERMIC WELDS SHALL BE USED FOR ALL GROUNDING CONNECTIONS BELOW GRADE.
12. ALL GROUND CONNECTIONS ABOVE GRADE (INTERIOR AND EXTERIOR) SHALL BE FORMED USING HIGH PRESS CRIMPS.
13. COMPRESSION GROUND CONNECTIONS MAY BE REPLACED BY EXOTHERMIC WELD CONNECTIONS.
14. ICE BRIDGE BONDING CONDUCTORS SHALL BE EXOTHERMICALLY BONDED OR BOLTED TO THE BRIDGE AND THE TOWER GROUND BAR.
15. APPROVED ANTIOXIDANT COATINGS (I.E. CONDUCTIVE GEL OR PASTE) SHALL BE USED ON ALL COMPRESSION AND BOLTED GROUND CONNECTIONS.
16. ALL EXTERIOR GROUND CONNECTIONS SHALL BE COATED WITH A CORROSION RESISTANT MATERIAL.
17. MISCELLANEOUS ELECTRICAL AND NON-ELECTRICAL METAL BOXES, FRAMES AND SUPPORTS SHALL BE BONDED TO THE GROUND RING, IN ACCORDANCE WITH THE NEC.
18. BOND ALL METALLIC OBJECTS WITHIN 6 FT. OF MAIN GROUND WIRES WITH 1-#2 AWG TIN-PLATED COPPER GROUND CONDUCTOR.
19. GROUND CONDUCTORS USED IN THE FACILITY GROUND AND LIGHTNING PROTECTION SYSTEMS SHALL NOT BE ROUTED THROUGH METALLIC OBJECTS THAT FORM A RING AROUND THE CONDUCTOR, SUCH AS METALLIC CONDUITS, METAL SUPPORT CLIPS OR SLEEVES THROUGH WALLS OR FLOORS, WHEN IT IS REQUIRED TO BE HOUSED IN CONDUIT TO MEET CODE REQUIREMENTS OR LOCAL CONDITIONS, NON-METALLIC MATERIAL SUCH AS PVC PLASTIC CONDUIT SHALL BE USED. WHERE USE OF METAL CONDUIT IS UNAVOIDABLE (E.G., NONMETALLIC CONDUIT PROHIBITED BY LOCAL CODE) THE GROUND CONDUCTOR SHALL BE BONDED TO EACH END OF THE METAL CONDUIT.
20. ALL GROUNDS THAT TRANSITION FROM BELOW GRADE TO ABOVE GRADE MUST BE #2 TINNED SOLID IN 3/4" LIQUID TIGHT CONDUIT FROM 24" BELOW GRADE TO WITHIN 3" TO 6" OF CAD-WELD TERMINATION POINT. THE EXPOSED END OF THE LIQUID TIGHT CONDUIT MUST BE SEALED WITH SILICONE CAULK. (ADD TRANSITIONING GROUND STANDARD DETAIL AS WELL).

NEC INSULATOR COLOR CODE

DESCRIPTION	PHASE/CODE LETTER	WIRE COLOR
240/120 1Ø	LEG 1	BLACK
	LEG 2	RED
AC NEUTRAL	N	WHITE
GROUND (EGC)	G	GREEN
VDC POS	+	*RED-POLARITY MARK AT TERMINATION
VDC NEG	-	*BLACK-POLARITY MARK AT TERMINATION
240V OR 208V, 3Ø	PHASE A	BLACK
	PHASE B	RED(ORG. IF HI LEG)
	PHASE C	BLUE
480V, 3Ø	PHASE A	BROWN
	PHASE B	ORANGE OR PURPLE
	PHASE C	YELLOW

* SEE NEC 210.5(C)(1) AND (2)

T-Mobile
18400 E. 22ND AVENUE
AURORA, CO 80011

CROWN CASTLE
116 INVERNESS DR. EAST STE# 280
ENGLEWOOD, CO 80112

T-MOBILE SITE NUMBER:
DN02489A

BU #: **858480**
ZOD_ALLTEL_CO06
_FAR_GOLDEN_CRY

MILLION DOLLAR HIGHWAY
RIDGWAY, CO 81432

EXISTING 35.0 FT
MONOPOLE

ISSUED FOR:

REV	DATE	DRWN	DESCRIPTION	DES./QA
A	07-9-2018	JAS	PRELIMINARY	ELG
B	08-20-2018	JAS	PRELIMINARY	ELG
0	08-28-2018	JAS	CONSTRUCTION	ELG
1	10-30-2018	JAS	CONSTRUCTION	ELG
2	12-13-2018	JAS	CONSTRUCTION	ELG
3	03-29-2019	JAS	CONSTRUCTION	ELG
4	04-18-2019	JAS	CONSTRUCTION	ELG

COLORADO LICENSED
JACOB GORALSKI
PE.0049661
PROFESSIONAL ENGINEER

5/7/2019

JACOB GORALSKI, PLLC
CONSULTING ENGINEER
JACOB GORALSKI, PLLC
CO PE# 0049661
1106 COLBI ST.
KENNEDALE, TX 76060
(817) 456-2621

IT IS A VIOLATION OF LAW FOR ANY PERSON, UNLESS THEY ARE ACTING UNDER THE DIRECTION OF A LICENSED PROFESSIONAL ENGINEER, TO ALTER THIS DOCUMENT.

SHEET NUMBER: T-2

REVISION: 4

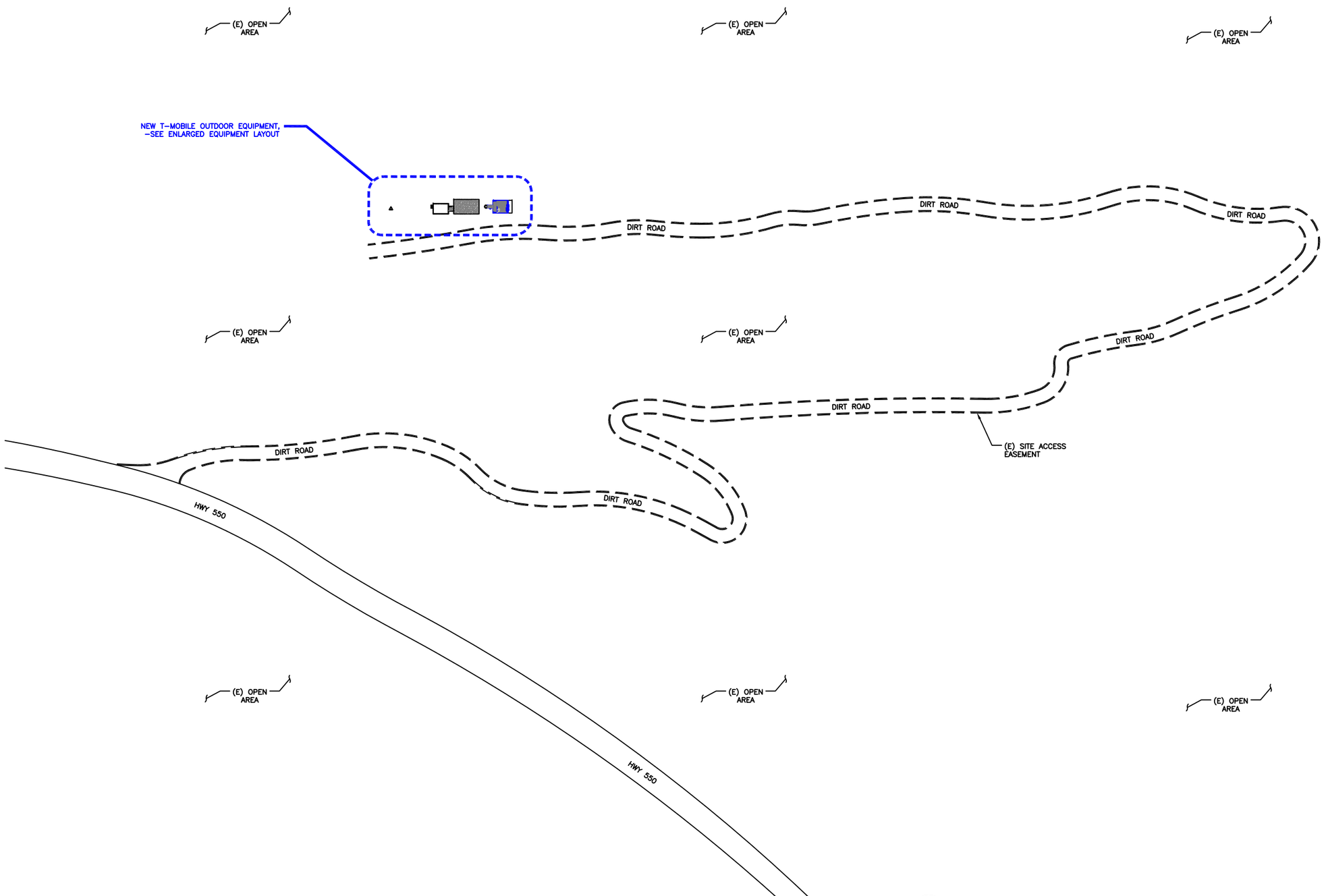

1 OVERALL SITE PLAN

SCALE: 8' 4' 0 8' 3/32"=1'-0" (FULL SIZE) 3/64"=1'-0" (11x17)

N

T-Mobile
18400 E. 22ND AVENUE
AURORA, CO 80011

CROWN CASTLE
116 INVERNESS DR. EAST STE# 280
ENGLEWOOD, CO 80112

T-MOBILE SITE NUMBER:
DN02489A

BU #: **858480**
ZOD_ALLTEL_CO06
_FAR_GOLDEN_CRY

MILLION DOLLAR HIGHWAY
RIDGWAY, CO 81432

EXISTING 35.0 FT
MONOPOLE

ISSUED FOR:

REV	DATE	DRWN	DESCRIPTION	DES./QA
A	07-9-2018	JAS	PRELIMINARY	ELG
B	08-20-2018	JAS	PRELIMINARY	ELG
0	08-28-2018	JAS	CONSTRUCTION	ELG
1	10-30-2018	JAS	CONSTRUCTION	ELG
2	12-13-2018	JAS	CONSTRUCTION	ELG
3	03-29-2019	JAS	CONSTRUCTION	ELG
4	04-18-2019	JAS	CONSTRUCTION	ELG

COLORADO LICENSED
JACOB GORALSKI
PE.0049661
PROFESSIONAL ENGINEER

5/7/2019

JACOB GORALSKI, PLLC
CONSULTING ENGINEER
JACOB GORALSKI, PLLC
CO PE# 0049661
1106 COLBI ST.
KENNEDALE, TX 76060
(817) 456-2621

IT IS A VIOLATION OF LAW FOR ANY PERSON, UNLESS THEY ARE ACTING UNDER THE DIRECTION OF A LICENSED PROFESSIONAL ENGINEER, TO ALTER THIS DOCUMENT.

SHEET NUMBER: C-1.1

REVISION: 4

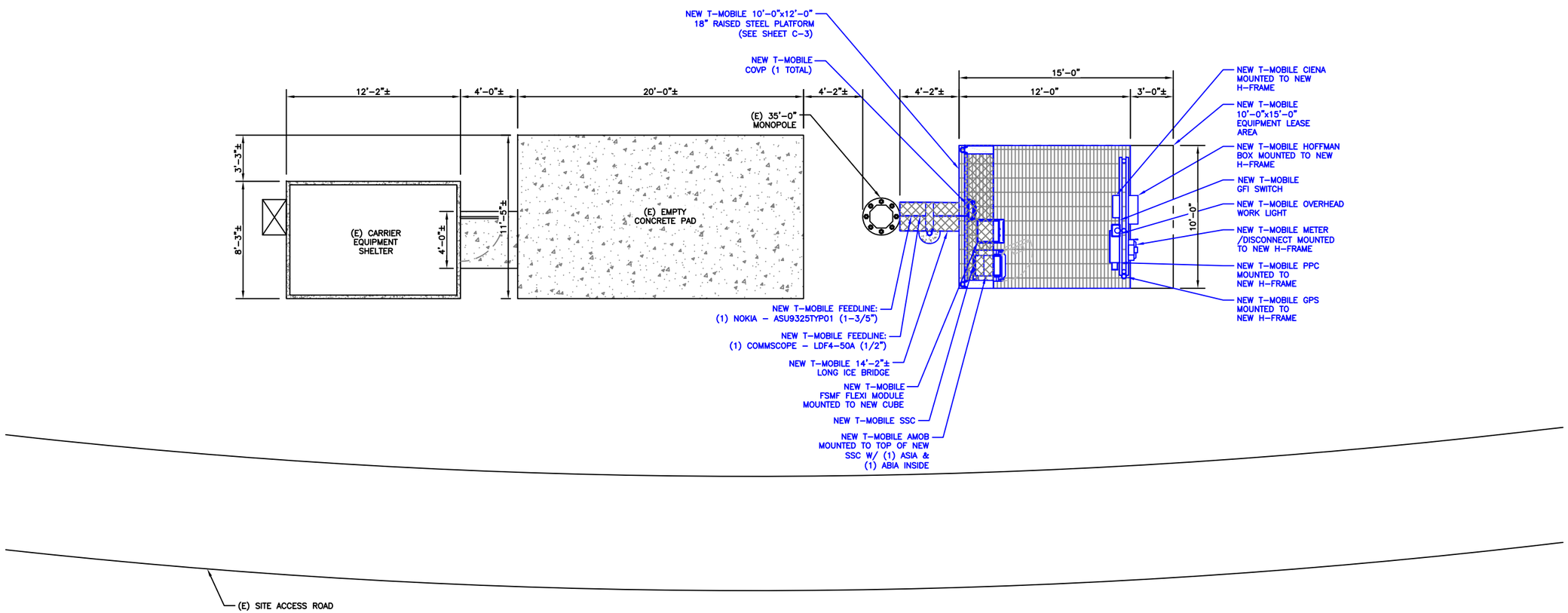

1 FINAL SITE PLAN

SCALE: 2' 1' 0 2' 1/2"=1'-0" (FULL SIZE) 1/4"=1'-0" (11x17)

N

T-Mobile
18400 E. 22ND AVENUE
AURORA, CO 80011

CROWN CASTLE
116 INVERNESS DR. EAST STE# 280
ENGLEWOOD, CO 80112

T-MOBILE SITE NUMBER:
DN02489A

BU #: **858480**
ZOD_ALLTEL_CO06
_FAR_GOLDEN_CRY

MILLION DOLLAR HIGHWAY
RIDGWAY, CO 81432

EXISTING 35.0 FT
MONOPOLE

ISSUED FOR:

REV	DATE	DRWN	DESCRIPTION	DES./QA
A	07-9-2018	JAS	PRELIMINARY	ELG
B	08-20-2018	JAS	PRELIMINARY	ELG
0	08-28-2018	JAS	CONSTRUCTION	ELG
1	10-30-2018	JAS	CONSTRUCTION	ELG
2	12-13-2018	JAS	CONSTRUCTION	ELG
3	03-29-2019	JAS	CONSTRUCTION	ELG
4	04-18-2019	JAS	CONSTRUCTION	ELG

COLORADO LICENSED
JACOB GORALSKI
PE.0049661
PROFESSIONAL ENGINEER

5/7/2019

JACOB GORALSKI, PLLC
CONSULTING ENGINEER
JACOB GORALSKI, PLLC
CO PE# 0049661
1106 COLBI ST.
KENNEDALE, TX 76060
(817) 456-2621

IT IS A VIOLATION OF LAW FOR ANY PERSON, UNLESS THEY ARE ACTING UNDER THE DIRECTION OF A LICENSED PROFESSIONAL ENGINEER, TO ALTER THIS DOCUMENT.

SHEET NUMBER: C-1.2

REVISION: 4

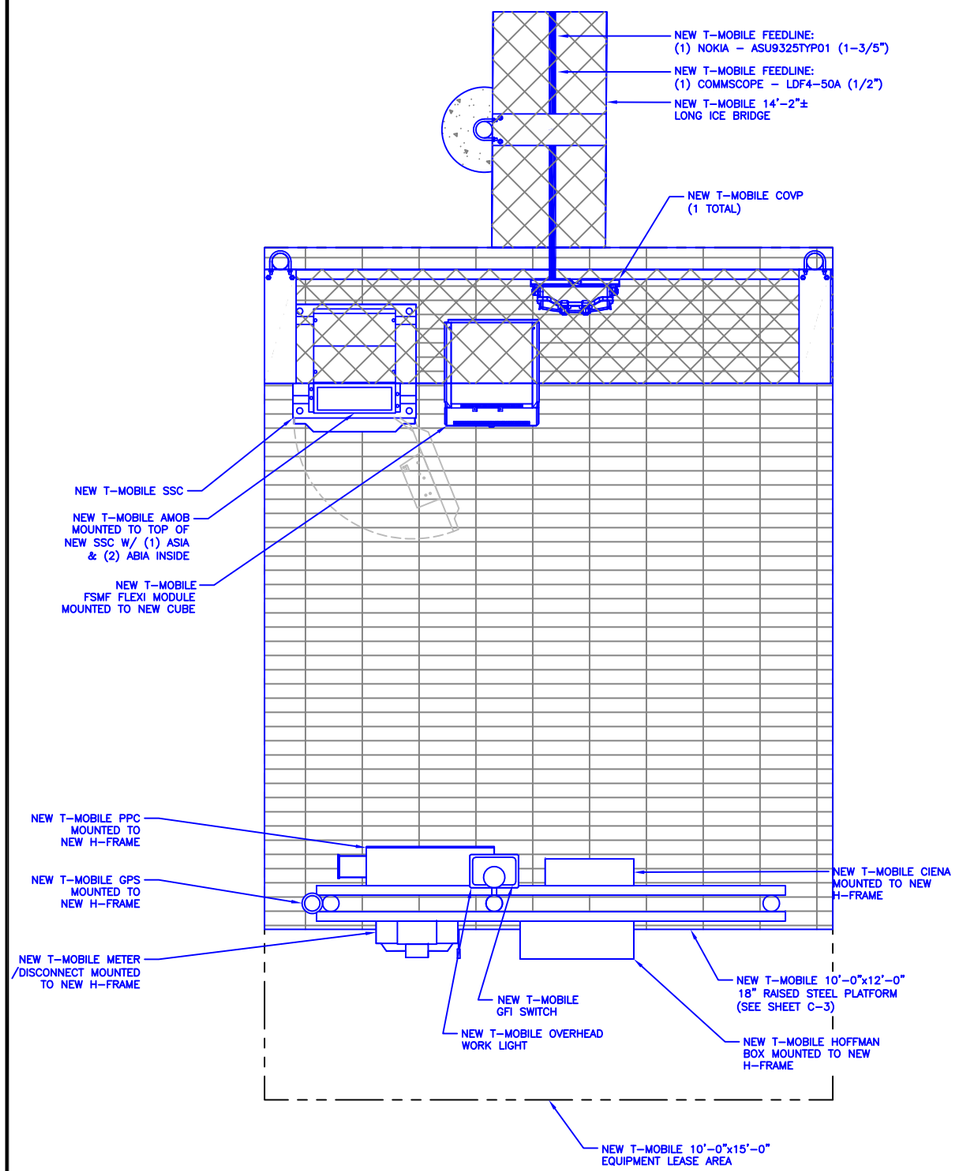

1 EQUIPMENT PLAN

SCALE: 1" 6" 0 1' 1"=1'-0" (FULL SIZE) 1/2"=1'-0" (11x17)

N

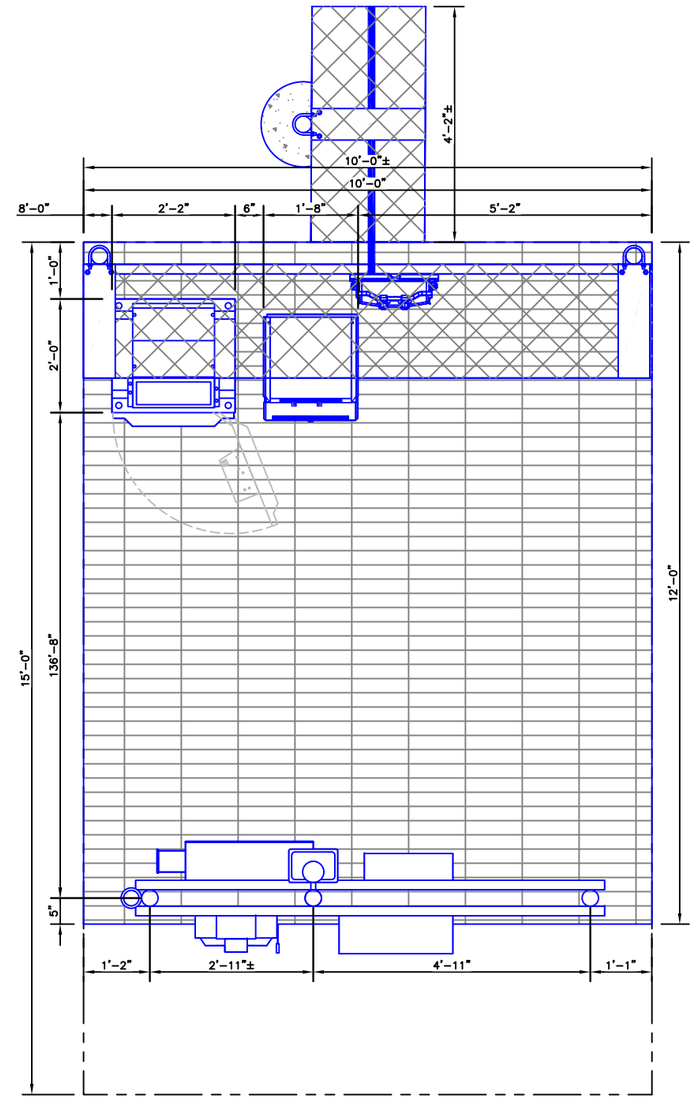

2 DIMENSION PLAN

SCALE: 1" 6" 0 1' 1"=1'-0" (FULL SIZE) 1/2"=1'-0" (11x17)

N

T-Mobile

18400 E. 22ND AVENUE
AURORA, CO 80011

CROWN CASTLE

116 INVERNESS DR. EAST STE# 280
ENGLEWOOD, CO 80112

T-MOBILE SITE NUMBER:
DN02489A

BU #: **858480**
ZOD_ALLTEL_CO06
_FAR_GOLDEN_CRY

MILLION DOLLAR HIGHWAY
RIDGWAY, CO 81432

EXISTING 35.0 FT
MONOPOLE

ISSUED FOR:

REV	DATE	DRWN	DESCRIPTION	DES./QA
A	07-9-2018	JAS	PRELIMINARY	ELG
B	08-20-2018	JAS	PRELIMINARY	ELG
0	08-28-2018	JAS	CONSTRUCTION	ELG
1	10-30-2018	JAS	CONSTRUCTION	ELG
2	12-13-2018	JAS	CONSTRUCTION	ELG
3	03-29-2019	JAS	CONSTRUCTION	ELG
4	04-18-2019	JAS	CONSTRUCTION	ELG

COLORADO LICENSED
JACOB GORALSKI
PE.0049661
PROFESSIONAL ENGINEER

5/7/2019

JACOB GORALSKI, PLLC
CONSULTING ENGINEER
JACOB GORALSKI, PLLC
CO PE# 0049661
1106 COLBI ST.
KENNEDALE, TX 76060
(817) 456-2621

IT IS A VIOLATION OF LAW FOR ANY PERSON, UNLESS THEY ARE ACTING UNDER THE DIRECTION OF A LICENSED PROFESSIONAL ENGINEER, TO ALTER THIS DOCUMENT.

SHEET NUMBER: C-1.3

REVISION: 4

NOTE:

CROWN TO DETERMINE FINAL RAD CENTER AT LATER DATE. APP & RFDS TO MATCH DRAWINGS

INSTALLER NOTE:

DIRECT TOWER MOUNTED EQUIPMENT MUST NOT TRAP OR INTERFERE W/ EXISTING SAFETY CLIMB.

INSTALLER NOTE:

PROPOSED ANTENNAS TO HAVE "SOCKS" INSTALLED TO MATCH EXISTING INSTALLED EQUIPMENT TO MAINTAIN STEALTH DESIGN

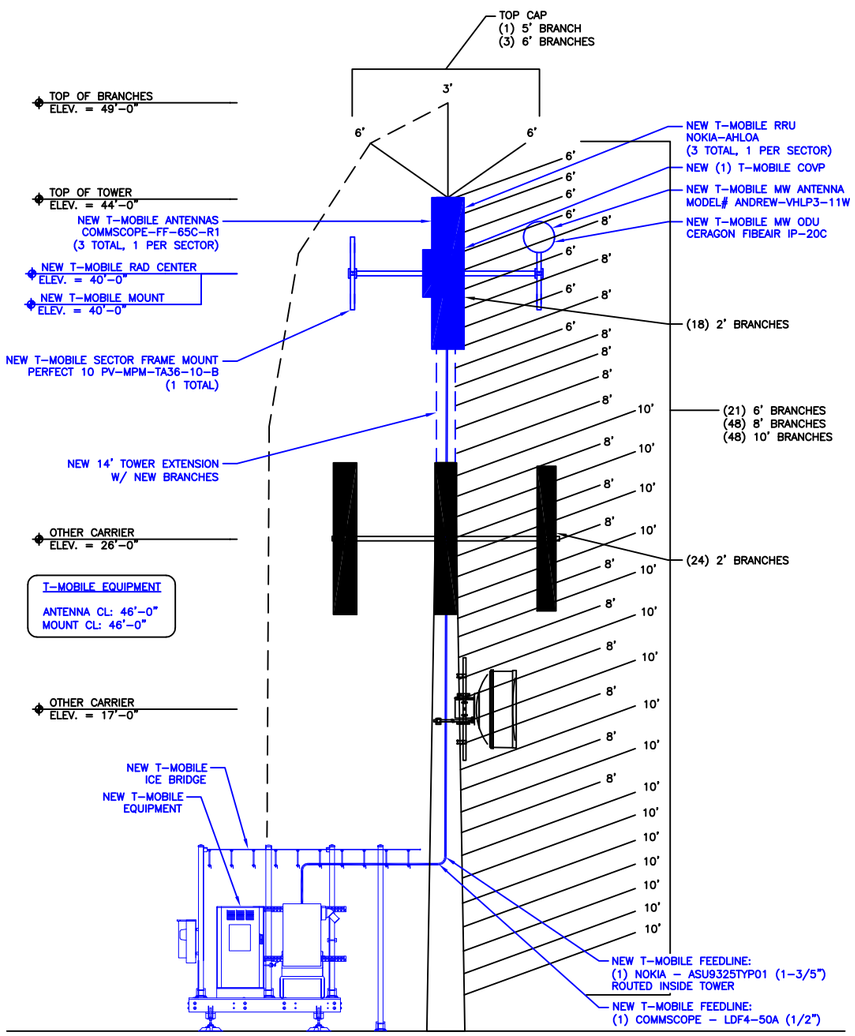

1 FINAL ELEVATION
SCALE: NOT TO SCALE

ANTENNA SCHEDULE				
SECTOR	ALPHA		BETA	GAMMA
ANTENNA POSITION	A-1	A-2	B-1	C-1
ANTENNA TYPES	L700-L600	-	L700-L600	L700-L600
AZIMUTH	335°	335°	160°	280°
RAD CENTER (AGL)	46'-0"	46'-0"	46'-0"	46'-0"
MODEL	COMMSCOPE - FF-65C-R1	ANDREW - VHLP3-11W	COMMSCOPE - FF-65C-R1	COMMSCOPE - FF-65C-R1
FEEDER LENGTH	±75'-0"	±75'-0"	±75'-0"	±75'-0"
FEEDER TYPE	HYBRID CABLE	COAX CABLE	HYBRID CABLE	HYBRID CABLE

2 ANTENNA SCHEDULE
SCALE: NOT TO SCALE

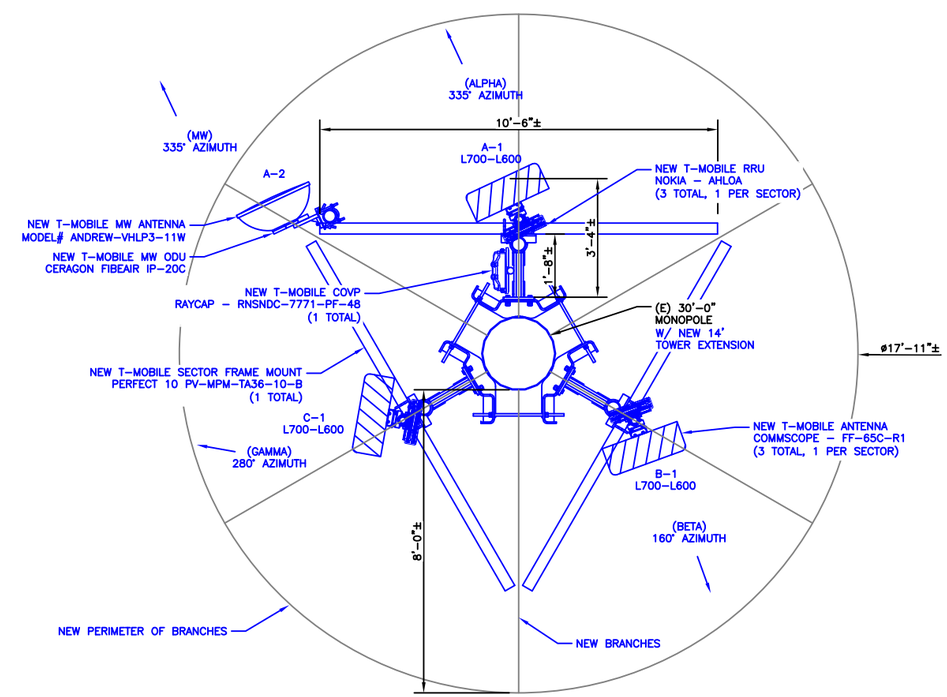

3 FINAL ANTENNA LAYOUT
SCALE: NOT TO SCALE

N

T-Mobile
18400 E. 22ND AVENUE
AURORA, CO 80011

CROWN CASTLE
116 INVERNESS DR. EAST STE# 280
ENGLEWOOD, CO 80112

T-MOBILE SITE NUMBER:
DN02489A

BU #: **858480**
ZOD_ALLTEL_CO06
_FAR_GOLDEN_CRY

MILLION DOLLAR HIGHWAY
RIDGWAY, CO 81432

EXISTING 35.0 FT
MONOPOLE

ISSUED FOR:

REV	DATE	DRWN	DESCRIPTION	DES./QA
A	07-9-2018	JAS	PRELIMINARY	ELG
B	08-20-2018	JAS	PRELIMINARY	ELG
0	08-28-2018	JAS	CONSTRUCTION	ELG
1	10-30-2018	JAS	CONSTRUCTION	ELG
2	12-13-2018	JAS	CONSTRUCTION	ELG
3	03-29-2019	JAS	CONSTRUCTION	ELG
4	04-18-2019	JAS	CONSTRUCTION	ELG

COLORADO LICENSED
JACOB GORALSKI
PE.0049661
PROFESSIONAL ENGINEER

5/7/2019

JACOB GORALSKI, PLLC
CONSULTING ENGINEER
JACOB GORALSKI, PLLC
CO PE# 0049661
1106 COLBI ST.
KENNEDALE, TX 76060
(817) 456-2621

IT IS A VIOLATION OF LAW FOR ANY PERSON, UNLESS THEY ARE ACTING UNDER THE DIRECTION OF A LICENSED PROFESSIONAL ENGINEER, TO ALTER THIS DOCUMENT.

SHEET NUMBER: C-2

REVISION: 4

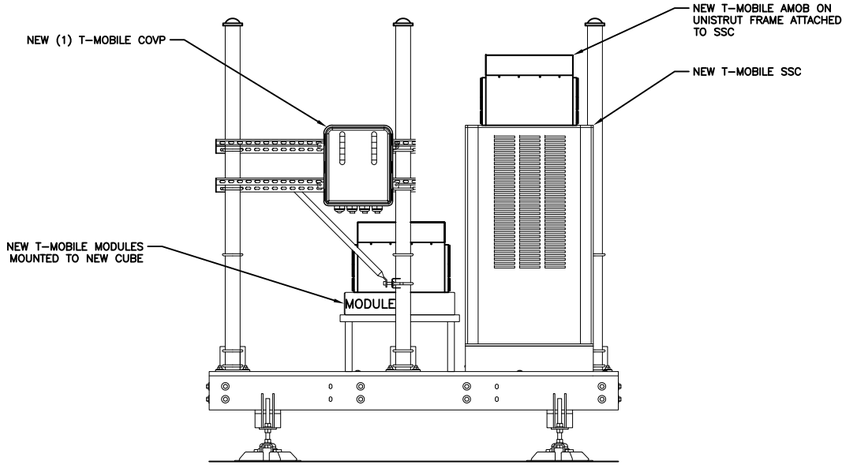

1 EQUIPMENT ELEVATION–NORTH
SCALE: NOT TO SCALE

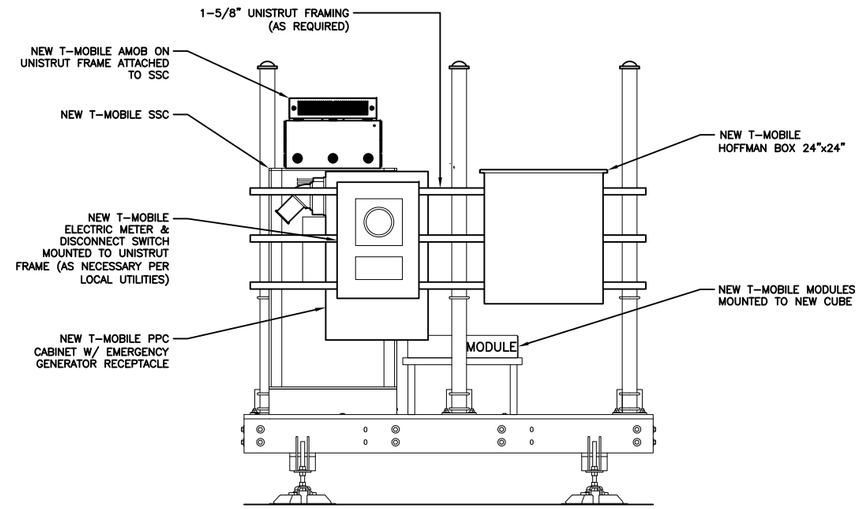

2 EQUIPMENT ELEVATION–SOUTH
SCALE: NOT TO SCALE

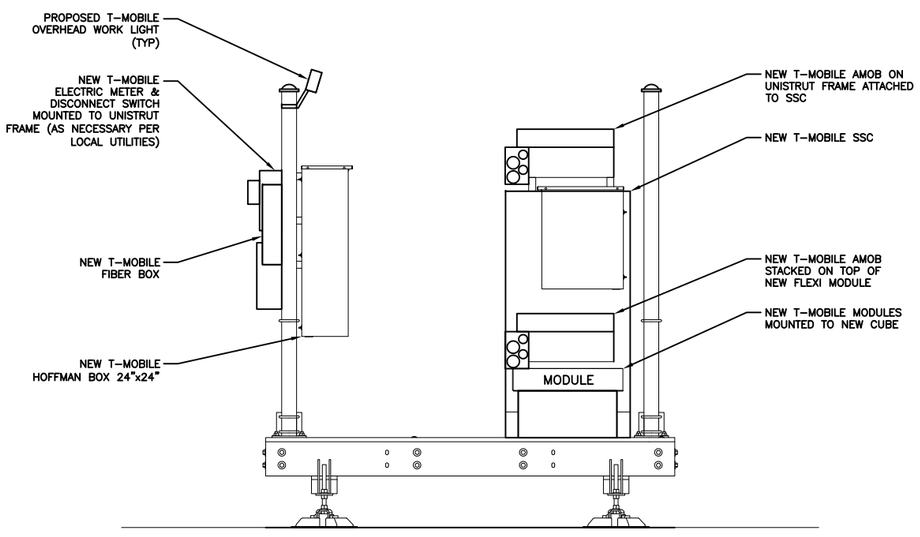

3 EQUIPMENT ELEVATION–WEST
SCALE: NOT TO SCALE

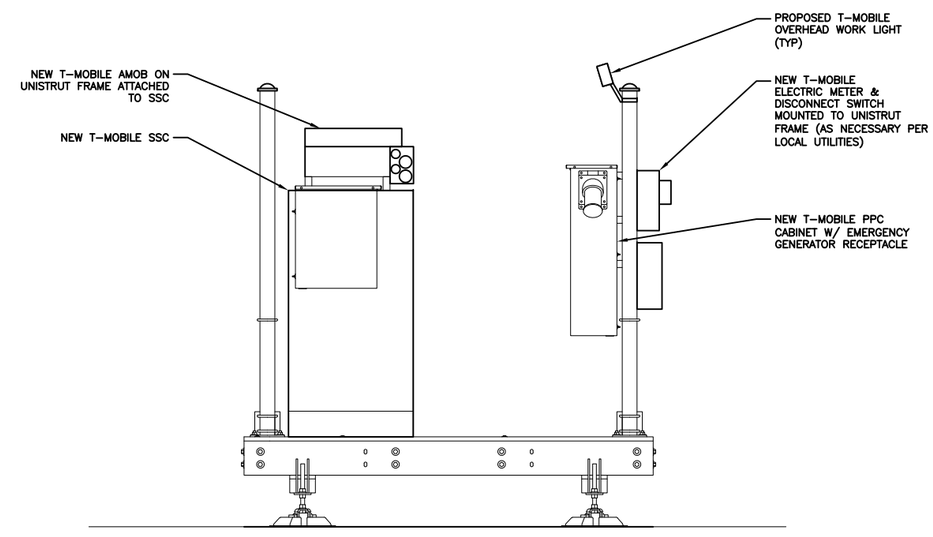

4 EQUIPMENT ELEVATION–EAST
SCALE: NOT TO SCALE

T-Mobile
18400 E. 22ND AVENUE
AURORA, CO 80011

CROWN CASTLE
116 INVERNESS DR. EAST STE# 280
ENGLEWOOD, CO 80112

T-MOBILE SITE NUMBER:
DN02489A

BU #: **858480**
ZOD_ALLTEL_CO06
_FAR_GOLDEN_CRY

MILLION DOLLAR HIGHWAY
RIDGWAY, CO 81432

EXISTING 35.0 FT
MONOPOLE

ISSUED FOR:

REV	DATE	DRWN	DESCRIPTION	DES./QA
A	07-9-2018	JAS	PRELIMINARY	ELG
B	08-20-2018	JAS	PRELIMINARY	ELG
0	08-28-2018	JAS	CONSTRUCTION	ELG
1	10-30-2018	JAS	CONSTRUCTION	ELG
2	12-13-2018	JAS	CONSTRUCTION	ELG
3	03-29-2019	JAS	CONSTRUCTION	ELG
4	04-18-2019	JAS	CONSTRUCTION	ELG

COLORADO LICENSED
JACOB GORALSKI
PE.0049661
PROFESSIONAL ENGINEER

5/7/2019

JACOB GORALSKI, PLLC
CONSULTING ENGINEER
JACOB GORALSKI, PLLC
CO PE# 0049661
1106 COLBI ST.
KENNEDALE, TX 76060
(817) 456-2621

IT IS A VIOLATION OF LAW FOR ANY PERSON, UNLESS THEY ARE ACTING UNDER THE DIRECTION OF A LICENSED PROFESSIONAL ENGINEER, TO ALTER THIS DOCUMENT.

SHEET NUMBER: C-3
REVISION: 4

L700 / L600 Configuration

Tower-Top RRU (Antenna and cabling of one sector shown for clarity)

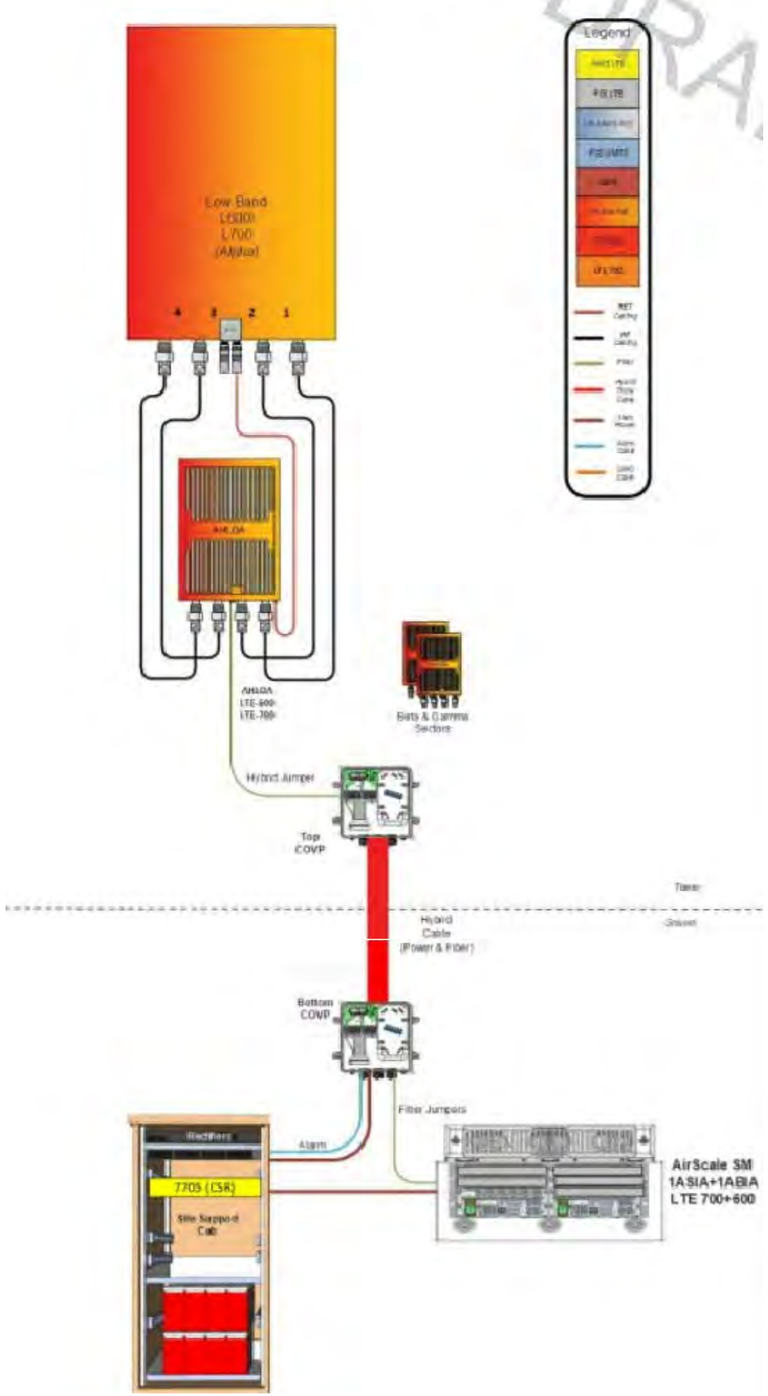

1 PLUMBING DIAGRAM
SCALE: NOT TO SCALE

CABLE TYPE	NUMBER, SIZE (AWG)	6/C #6 + 2/C #18
	VOLTAGE	600
	OUTER JACKET	PVC
	SHIELDING	CORRUGATED COPPER
	MAX SHIELD RESISTANCE (ohm/ft @ 20 c)	0.0035
	DRAIN	N/A
	RIPCORD	KEVLAR
	DC CONDUCTOR MATERIAL	COPPER
	DC CONDUCTOR SIZE (AWG)	6
	MAX DC RESISTANCE (ohm/1000 ft)	0.411 @ 20°C
	COLOR CODE	BLACK/RED
	ALARM CONDUCTOR MATERIAL	COPPER
	ALARM CONDUCTOR SIZE (AWG)	18
	MAX DC RESISTANCE (ohm/1000 ft)	6.7
	COLOR CODE	TBD
	FIBER CABLES	SM
	OUTER DIAMETER (in) – NOMINAL	1.24
	WEIGHT (lb/ft)	1.05
	MINIMUM BEND RADIUS (in)	15
	BEND MOMENT (lb/ft)	TBD
	TENSILE STRENGTH (lb)	325
	CRUSH RESISTANCE, FOTP–41 (N/mm)	22
	STRENGTH MEMBER	NO
	OPERATING TEMPERATURE RANGE (LOW)	–40°C
	OPERATING TEMPERATURE RANGE (HIGH) +80°C	
FIBER TYPE		LOW WATER PEAK, SINGLE MODE, LOOSE TUBE
FIBER STANDARD COMPLIANCE		ITU–T REC. G.652.D, G657.A2
		IEC 60793–2–50 TYPE B.1.3 & TYPE B.6 A&B
FIBER COATING DIAMETER (um)		.242 +/– 0.007mm 0.9 +/– 0.0005mm
FIBER COUNT		24
NUMBER OF FIBER SUBUNITS		1
FIBER COUNT EACH UNITS		24
FIBER OUTER JACKETS		FR JACKET
MAX ATTENUATION, 1310 mm (dB/Km)		LESS THAN EQUA 0.5
MAX ATTENUATION, 1550 MM (dB/Km)		LESS THAN EQUA 0.5

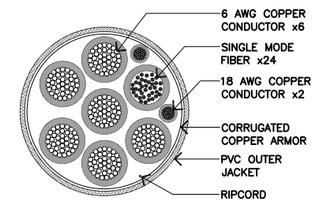

NOTE: CABLE CROSS SECTION NOT DRAWN TO SCALE

CABLE TYPE: 6/#6, 2/#18, 24 FIBER		
CABLE ASSY LENGTH (L)	TOLERANCE (FT)	PACKAGING METHOD
50	+0.50 / –0.50	COIL
100	+1.00 / –1.00	REEL
125	+1.25 / –1.25	REEL
150	+1.50 / –1.50	REEL
175	+1.75 / –1.75	REEL

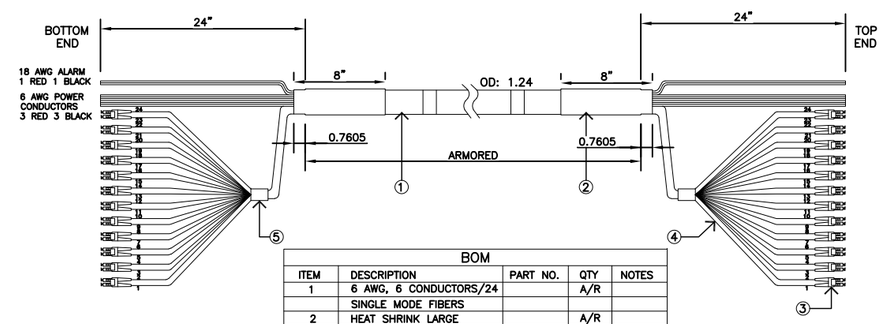

BOM				
ITEM	DESCRIPTION	PART NO.	QTY	NOTES
1	6 AWG, 6 CONDUCTORS/24		A/R	
	SINGLE MODE FIBERS			
2	HEAT SHRINK LARGE		A/R	
3	LC CONNECTOR DUPLEX		24	
4	FURCATION TUBE		48	
5	HEAT SHRINK SMALL		A/R	

NOTES:
1. DIMENSIONS ARE IN INCHES.
2. 12 DUPLEX LC CONNECTORS PER END, 4 DUPLEX LC CONNECTORS PER GROUP, TOTAL OF 3 GROUPS.
3. TOTAL OF 12 PAIRS OF SINGLE MODE FIBERS.
4. TOTAL OF 6 AC CABLES 3 RED & 3 BLACK.
5. TOP END AND BOTTOM END ARE IDENTICAL.
6. EACH AND EVERY FIBERS MUST BE LABELED FROM #1 TO #24 AT BOTH ENDS.
7. LABEL BOTH ENDS WITH: SERIAL NUMBER, PART NUMBER AND CUSTOMER NAME.
8. INSERTION LOSS AND RETURN LOSS SHALL BE MEASURED 100%%% SAMPLING FOR ALL PRODUCTION.
9. TEST AND MEASUREMENT REPORT SHALL BE FURNISHED WITH CABLE ASSEMBLY.
10. ALL CONNECTORS SHALL BE SHIPPED WITH FURRULES PROTECTED WITH REMOVABLE CAPS.
11. ALL FIBER BREAKOUT WILL BE PROTECTED FROM WATER PENETRATION.

COLORS IDENTIFIED AT THE BASE OF EACH BOOT IDENTICAL AT BOTH ENDS

FIBER	COLOR	FIBER	COLOR
1	BLUE	13	RED
2	BLUE	14	RED
3	ORANGE	15	BLACK
4	ORANGE	16	BLACK
5	GREEN	17	YELLOW
6	GREEN	18	YELLOW
7	BROWN	19	PURPLE
8	BROWN	20	PURPLE
9	GREY	21	TAN
10	GREY	22	TAN
11	WHITE	23	PINK
12	WHITE	24	PINK

2 CABLE SPECIFICATIONS
SCALE: NOT TO SCALE

T-Mobile
18400 E. 22ND AVENUE
AURORA, CO 80011

CROWN CASTLE
116 INVERNESS DR. EAST STE# 280
ENGLEWOOD, CO 80112

T-MOBILE SITE NUMBER:
DN02489A

BU #: **858480**
ZOD_ALLTEL_CO06
_FAR_GOLDEN_CRY

MILLION DOLLAR HIGHWAY
RIDGWAY, CO 81432

EXISTING 35.0 FT
MONOPOLE

ISSUED FOR:

REV	DATE	DRWN	DESCRIPTION	DES./QA
A	07-9-2018	JAS	PRELIMINARY	ELG
B	08-20-2018	JAS	PRELIMINARY	ELG
0	08-28-2018	JAS	CONSTRUCTION	ELG
1	10-30-2018	JAS	CONSTRUCTION	ELG
2	12-13-2018	JAS	CONSTRUCTION	ELG
3	03-29-2019	JAS	CONSTRUCTION	ELG
4	04-18-2019	JAS	CONSTRUCTION	ELG

COLORADO LICENSED
JACOB GORALSKI
PE.0049661
PROFESSIONAL ENGINEER

5/7/2019

JACOB GORALSKI, PLLC
CONSULTING ENGINEER
JACOB GORALSKI, PLLC
CO PE# 0049661
1106 COLBI ST.
KENNEDALE, TX 76060
(817) 456–2621

IT IS A VIOLATION OF LAW FOR ANY PERSON, UNLESS THEY ARE ACTING UNDER THE DIRECTION OF A LICENSED PROFESSIONAL ENGINEER, TO ALTER THIS DOCUMENT.

SHEET NUMBER: C-4

REVISION: 4

Product Specifications

COMMSCOPE®

FF-65C-R1

4-port sector antenna, 4x 617–806 MHz, 65° HPBW, 1x RET, 600MHz-Ready Antenna Technology

Electrical Specifications

Frequency Band, MHz	617–698	698–806
Gain, dBi	15.4	15.6
Beamwidth, Horizontal, degrees	64	63
Beamwidth, Vertical, degrees	10.3	9.2
Beam Tilt, degrees	2–13	2–13
USLS (First Lobe), dB	19	17
Front-to-Back Ratio at 180°, dB	33	31
Isolition, dB	28	28
Isolition, Intersystem, dB	28	28
VSWR | Return Loss, dB	1.5 | 14.0	1.5 | 14.0
PIM, 3rd Order, 2 x 20 W, dBc		-153
Input Power per Port at 50°C, maxmum, watts	250	250
Polarization	±45°	±45°
Impedance	50 ohm	50 ohm

Electrical Specifications, BASTA*

Frequency Band, MHz	617–698	698–806
Gain by all Beam Tilts, average, dBi	15.0	15.3
Gain by all Beam Tilts Tolerance, dB	±0.6	±0.5
Gain by Beam Tilt, average, dBi	2° | 14.8 8° | 15.1 13° | 15.0	2° | 15.0 9° | 15.4 13° | 15.2
Beamwidth, Horizontal Tolerance, degrees	±3.3	±4
Beamwidth, Vertical Tolerance, degrees	±0.6	±0.7
USLS, beampeak to 20° above beampeak, dB	17	14
Front-to-Back Total Power at 180° ± 30°, dB	22	22
CPR at Boresight, dB	18	20
CPR at Sector, dB	4	10

* CommScope® supports NGMN recommendations on Base Station Antenna Standards (BASTA). To learn more about the benefits of BASTA, download the whitepaper Time to Raise the Bar on BSAs.

Port Configuration

©2013 CommScope, Inc. All rights reserved. All trademarks identified by ® or ™ are registered trademarks, respectively, of CommScope. All specifications are subject to change without notice. See www.commscope.com for the most current information. Revised: February 12, 2018

Product Specifications

COMMSCOPE®

FF-65C-R1

General Specifications

Operating Frequency Band	617 – 806 MHz
Antenna Type	Sector
Band	Single band
Perfbrmance Note	Outdoor usage
Total Input Power, maximum	500 W @ 50 °C

Mechanical Specifications

RF Connector Quantity, total	8
RF Connector Quantity, low band	8
RF Connector Interface	4.3-10 Female
Color	Light gray
Grounding Type	RF connector inner conductor and body groundrd to reflector and mounting bracket
Radator Material	Aluminum | Low loss circuit board
Radome Material	Fiberglass, UV resistant
RF Connector Location	Bottom
Wind Loading, frontal	1055.0 N @ 150 km/h 237.2 lbf @ 150 km/h
Wind Loading, lateral	355.0 N @ 150 km/h 79.8 lbf @ 150 km/h
Wind Loading, maximum	1433.0 N @ 150 km/h 322.2 lbf @ 150 km/h
Wind Speed, maximum	241 km/h | 150 mph

Dimensions

Length	2437.0 mm | 95.9 in
Width	640.0 mm | 25.2 in

©2013 CommScope, Inc. All rights reserved. All trademarks identified by ® or ™ are registered trademarks, respectively, of CommScope. All specifications are subject to change without notice. See www.commscope.com for the most current information. Revised: February 12, 2018

1 COMMSCOPE – FF-65C-R1
SCALE: NOT TO SCALE

AirScale Dual RRH 4T4R B12/71 240W AHLOA

DRAFT

Product Code: 474331A	
Supported Frequency bands	3GPP Band 12/71
Frequencies	Band 12 adjusted: UL 698 – 716 MHz, DL 728 – 746 MHz Band 71: UL 663 MHz – 698 MHz, DL 617 MHz – 652 MHz
Number of TX/RX paths/pipes	4 pipes, 2T2R, 2T4R, 4T4R for both bands
Instantaneous Bandwidth IBW	17 MHz for B12 and 35MHz for B71 1 MHz below B12 NB IoT future use
Occupied Bandwidth OBW	UL 53MHz contiguous DL B12 17MHz + 1 MHz NB IoT future use, B71 35MHz
Output Power	60W per TX shared between bands
Supply Voltage / Range	DC-48 V / -36 V to -60 V
Typical Power Consumption	640W [ETSI Busy Hour Load at 4TX@60W
	450W [ETSI Busy Hour Load at 4TX@20W
Antenna Ports	4 ports, 4.3-10+
Optical Ports	2 x CPRI 9.8 Gbps
ALD Control Interfaces	AISG3.0 and RET (DC on ANT1 & ANT3)
Other Interfaces	External Alarm MDR-26 (4 inputs, 1 Output) DC Circular Power Connector
Physical	560 mm x 308 mm x 189 mm Approximately 38kg with no covers or brackets
Operating Temperature Range	-40°C to 55°C (with no solar load)
Surge Protection	Class II 5A
Installation Options	Pole, Wall, Book Mount

NOKIA

1 © Nokia 2017
Confidential

2 NOKIA – AHLOA
SCALE: NOT TO SCALE

INSTALLER NOTES:

1. COMPLY WITH MANUFACTURERS INSTRUCTIONS TO ENSURE THAT ALL RRUs RECEIVE ELECTRICAL POWER WITHIN 24 HOURS OF BEING REMOVED FROM THE MANUFACTURER'S PACKAGING.
2. DO NOT OPEN RRU PACKAGES IN THE RAIN.
3. ALL PIPES, BRACKETS, AND MISCELLANEOUS HARDWARE TO BE GALVANIZED UNLESS NOTED OTHERWISE.

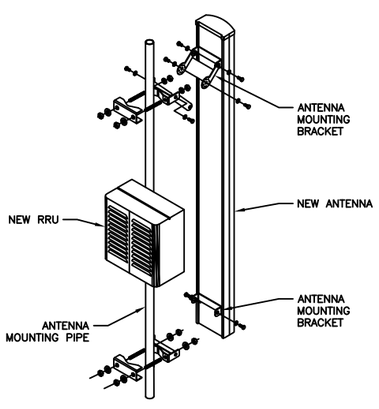

NOTE:

ANTENNA NOT SHOWN FOR CLARITY

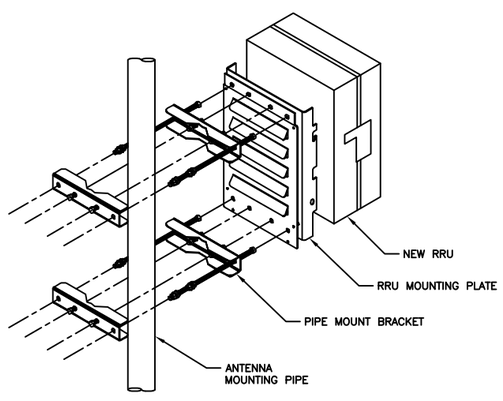

3 MOUNTING DETAILS
SCALE: NOT TO SCALE

DATA SHEET DC Surge Protection for RRH/RFM (High-Capacity Junction Box)

ASU9338TYP01 (RNSNDC-7771-PF-48)

Overvoltage Protection & Fiber Management Junction Box

The deployment of Remote Radio Head (RRH) and Remote Flexi Modules (RFM) architecture poses unique challenges to the mobile telecom industry. Raycap's innovative RRH protection solutions mitigate the risk of damage due to lightning and provide high levels of availability and reliability to radio equipment.

Features

- Employs the Strikesorb® 30-V1-HV Surge Protective Device (SPD) specifically designed for the Remote Radio Head (RRH) and Remote Flexi Modules (RFM) installation environment and certified for use in DC applications and at low DC operating voltages (48V).
- The Strikesorb 30-V1-HV is a Class I SPD, certified by VDE per the IEC 61643-1 standard as suitable for installation in areas where direct lightning exposure is expected. Strikesorb 30-V1-HV is able to withstand direct lightning currents of up to 5kA (10/350) and induced surge currents of up to 60kA (8/20).
- Provides very low let through / clamping voltage - unique for a Class I product - as it does not employ spark gaps or other switching elements. Strikesorb offers unique protection levels to the RRH equipment as well as the Base Band Units.
- Stock unit ships with all glands necessary for use with hybrid cable. This includes the top and base of towers, and the central unit on roof top applications.
- Fully recognized to the UL 1449 3rd Edition Safety Standard.
- Patent pending design

Benefits

- Offers unique maintenance-free protection against direct lightning currents
- Protects up to 9 RRHs/RFMs and connects up to 18 fiber pairs.
- Utilizes an IP 67 rated enclosure, allowing for indoor or outdoor installation on a roof or tower top.
- Configurable cable ports are designed to accommodate NSN high-capacity/ low-capacity hybrid trunk cables (combined power and fiber optic), Coax Reuse, and NSN hybrid jumper cables.
- Lightweight aerodynamic design provides maximum flexibility for tower top installation.

© 2012 Raycap All rights reserved.

G02-00-187 120504

4 RAYCAP – RNSDC-7771-PF-48
SCALE: NOT TO SCALE

T-Mobile
18400 E. 22ND AVENUE
AURORA, CO 80011

CROWN CASTLE
116 INVERNESS DR. EAST STE# 280
ENGLEWOOD, CO 80112

T-MOBILE SITE NUMBER:
DN02489A

BU #: **858480**
ZOD_ALLTEL_CO06
_FAR_GOLDEN_CRY

MILLION DOLLAR HIGHWAY
RIDGWAY, CO 81432

EXISTING 35.0 FT
MONOPOLE

ISSUED FOR:

REV	DATE	DRWN	DESCRIPTION	DES./QA
A	07-9-2018	JAS	PRELIMINARY	ELG
B	08-20-2018	JAS	PRELIMINARY	ELG
0	08-28-2018	JAS	CONSTRUCTION	ELG
1	10-30-2018	JAS	CONSTRUCTION	ELG
2	12-13-2018	JAS	CONSTRUCTION	ELG
3	03-29-2019	JAS	CONSTRUCTION	ELG
4	04-18-2019	JAS	CONSTRUCTION	ELG

COLORADO LICENSED
JACOB GORALSKI
PE.0049661
PROFESSIONAL ENGINEER

5/7/2019

JACOB GORALSKI, PLLC
CONSULTING ENGINEER
JACOB GORALSKI, PLLC
CO PE# 0049661
1106 COLBI ST.
KENNEDALE, TX 76060
(817) 456-2621

IT IS A VIOLATION OF LAW FOR ANY PERSON, UNLESS THEY ARE ACTING UNDER THE DIRECTION OF A LICENSED PROFESSIONAL ENGINEER, TO ALTER THIS DOCUMENT.

SHEET NUMBER: C-5

REVISION: 4

VHLP3-11W-6WH/A

1.0 m | 3 ft ValuLine® High Performance Low Profile Antenna, single-polarized, 10.125–11.700 GHz, CPR90C flange, white antenna, composite broadband gray radome without flash, standard pack—one-piece reflector

Product Classification

Brand	ValuLine®
Product Type	Microwave antenna

General Specifications

Antenna Type	VHLP – ValuLine® High Performance Low Profile Antenna, single-polarized
Diameter, nominal	1.0 m | 3 ft
Packing	Standard pack
Radome Color	Gray
Radome Material	Composite Broadband
Reflector Construction	One-piece reflector
Antenna Input	CPR90G
Antenna Color	White
Antenna Type	VHLP – ValuLine® High Performance Low Profile Antenna, single-polarized
Diameter, nominal	1.0 m | 3 ft
Flash Included	No
Polarization	Single

Electrical Specifications

Operating Frequency Band	10.125 – 11.700 GHz
Beamwidth, Horizontal	2.9 °
Beamwidth, Vertical	2.9 °
Cross Polarization Discrimination (XPD)	30 dB
Electrical Compliance	Brazil Anatel Class 2 | Canada SRSP 310.5 | ETSI 302 217 Class 3 | US FCC Part 101A @ 10.55–10.7 GHz | US FCC Part 101A @ 10.7–11.7 GHz | US FCC Part 101B @ 10.125–11.7 GHz
Front-to-Back Ratio	64 dB
Gain, Low Band	37.8 dBi
Gain, Mid Band	38.4 dBi
Gain, Top Band	35.0 dBi
Operating Frequency Band	10.125 – 11.700 GHz

©2018 CommScope, Inc. All rights reserved. All trademarks identified by ® or ™ are registered trademarks, respectively, of CommScope. All specifications are subject to change without notice. See www.commscope.com for the most current information. Revised: July 12, 2018

COMMSCOPE®

VHLP3-11W-6WH/A

Radiation Pattern Envelope Reference (RPE)	7164A | 7166A
Return Loss	17.7 dB
VSWR	1.30

Mechanical Specifications

Fine Azimuth Adjustment	±15°
Fine Elevation Adjustment	±15°
Mounting Pipe Diameter	90 mm–120 mm | 3.5 in–4.7 in
Net Weight	17 kg | 37 lb
Side Struts, Included	0
Side Struts, Optional	1 inboard
Wind Velocity Operational	180 km/h | 112 mph
Wind Velocity Survival Rating	250 km/h | 155 mph

Wind Forces At Wind Velocity Survival Rating

Angle α for MT Max	0 °
Axial Force (FA)	2303 N | 653 lbf
Side Force (FS)	1439 N | 324 lbf
Twisting Moment (MT)	1179 N-m | 870 ft lb
Weight with 1/2 in (12 mm) Radial Ice	46 kg | 101 lb
Zcg with 1/2 in (12 mm) Radial Ice	84 mm | 3 in
Zcg without Ice	125 mm | 5 in

©2018 CommScope, Inc. All rights reserved. All trademarks identified by ® or ™ are registered trademarks, respectively, of CommScope. All specifications are subject to change without notice. See www.commscope.com for the most current information. Revised: July 12, 2018

COMMSCOPE®

3 MW ANTENNA SPEC
SCALE: NOT TO SCALE

Data Sheet

FibeAir® IP-20C

Compact All-Outdoor Multi-Core Node

FibeAir IP-20C sets a new standard in microwave transmission combining multi-core radio technology and LoS 4X4 MIMO for ultra-high capacity along with a rich set of Carrier Ethernet advanced services. Compact, all-outdoor design allows deployment anywhere while remote upgradability protects investment.

FibeAir IP-20C breaks capacity barriers offering a virtual fiber solution in licensed 6-42 GHz frequencies - 1 Gbps in a box. Its versatility makes it ideal for a wide variety of cost-effective deployment scenarios including macrocell backhaul, small-cell aggregation and multi-carrier trunks. As a software-defined radio, it can be remotely configured to quadruple capacity, double link distance and reduce power consumption ensuring long-term, cost-efficient operation as needs change. It is easily and quickly deployable compared with fiber, allowing operators to achieve much faster time to new revenue streams, lower total cost of ownership and long-term peace of mind.

FibeAir IP-20C is future-proof, ready for upgrade from 1+0 to 2+0, doubling the capacity, from day one. Activating the second transceiver is accomplished remotely without a site visit. A complete solution, it offers a rich set of Carrier Ethernet advanced services, providing a wide range of new capabilities that address the diverse needs of mobile operators, ISPs, utilities, large enterprises and private networks.

FibeAir IP-20C's unique multi-core architecture is based on an advanced parallel radio processing engine built around Ceragon's in-house baseband modem and RFIC chipsets. The result is superior radio performance with reduced power consumption and form-factor. It can be deployed either as an all-outdoor node or as a multi-core radio unit in a split-mount configuration with another IP-20 platform indoor node.

Compact All-Outdoor Multi-Core Node

- Multi-core radio solution delivering multi-Gbps anywhere
  - Remote activation of the 2nd TRX - future upgrades without additional site visits
- Multi-gigabits radio capacity with high spectral efficiency
  - Virtual fiber in licensed frequencies – 1 Gbps in a box
  - LoS 4X4 MIMO and up to 2048 QAM modulation
- High service granularity enables roll-out of new business models
  - Intelligent service-centric management utilizing Hierarchical QoS and advanced OAM capabilities
  - Integrated Ethernet switch, MEF Carrier Ethernet 2.0-compliant and MPLS-TP-ready
- Common OS & software-defined engine simplify network modernization
  - Unified CeraOS across entire IP-20 platform
  - Powered by programmable network processor

CERAGON

Radio

Supported Frequency Range

- 6-42 GHz

Configurations

- 1+0 to 4+0, 1+1/2+2, E/W

Radio Features

- Multi-Carrier Adaptive Bandwidth Control (up to 2+0)
- Protection: 1+1 HSB,2+2 HSB
- High spectral utilization: QPSK to 2048 QAM w/ACM
- XPIC
- 2x2 / 4x4 LoS MIMO

Ethernet

Ethernet Interfaces

- Traffic Interfaces – 1x 10/100/1000Base-T (RJ-45) and 2x1000base-X (Optical SFP) or 10/100/1000Base-T (Electrical SFP)
- Management Interface - 1 x 10/100 Base-T (RJ-45)
- SFP Types - Optical 1000Base-LX (1310 nm) or SX (850 nm)

Note: SFP devices must be of industrial grade (-40°C to +85°C)

Ethernet Features

- MTU – 9600 Bytes
- Quality of Service
  - Multiple Classification criteria (VLAN ID, p-bits, IPv4 DSCP, IPv6 TC, MPLS EXP)
  - 8 priority queues
  - Deep buffering (configurable up to 64 Mbit per queue)
  - WRED
  - Hierarchical QoS - high service granularity *
  - P-bit marking/remarking
- 4K VLANs
- VLAN add/remove/translate
- Frame Cut Through - controlled latency and PDV for delay sensitive applications
- Header De-Duplication – Capacity boosting by eliminating inefficiency in all layers (L2,MPLS, L3,L4, Tunneling – GTP for LTE, GRE)
- Ethernet OAM – EFM (IEEE 802.3ah), CFM (IEEE 802.1ag), ITU-Y.1731*

Synchronization

Synchronization Distribution

- Sync Distribution over any traffic interface (GE/FE)
- SyncE (ITU-T G.8261, G.8262)
- SSM/ESMC Support for ring/mesh applications (ITU-T G.8264)
- SyncE Regenerator mode, providing PRC grade (ITU-T G.811) performance for smart pipe applications.

IEEE-1588

- Optimized Transport for reduced PDV
- IEEE-1588 TC*

Standards

MEF

- Carrier Ethernet 2.0 (CE 2.0)**

Supported Ethernet Standards

- 10/100/1000base-T/X (IEEE 802.3)
- Ethernet VLANs (IEEE 802.3ac)
- Virtual LAN (VLAN, IEEE 802.1Q)
- Class of service (IEEE 802.1p)
- Provider bridges (QinQ – IEEE 802.1ad)
- Link aggregation (IEEE 802.3ad)
- Auto MDI/MDIX for 1000baseT
- RFC 1349: IPv4 TOS
- RFC 2474: IPv4 DSCP
- RFC 2460: IPv6 Traffic Classes

Standards Compliance

- EMC: EN 301 489-1, EN 301 489-4, Class B (Europe), FCC 47 CFR, part 15, class B (US), ICES-003, Class B (Canada), TEC/EMI/TEL-001/01, Class B (India)
- Surge: EN61000-4-5, Class 4 (for PWR and ETH1/PoE ports)
- Safety: EN 60950-1, IEC 60950-1, UL 60950-1, CSA-C22.2 No 60950-1, EN 60950-22, UL 60950-22, CSA C22.2.60950-22
- Storage: ETSI EN 300 019-1-1 Class 1.2
- Transportation: ETSI EN 300 019-1-2 Class 2.3

Technical Specifications

Mechanical Specifications

- Dimensions – 230mm(H), 233mm(W), 98mm(D), 6.5kg
- Pole Diameter Range (for Remote Mount Installation) – 8.89 cm – 11.43 cm

Environmental Specifications

- -33°C to +55°C (-45°C to +60°C extended)

Power Input Specifications

- Standard Input: -48 VDC
- DC Input range: -40 to -60 VDC

Power Consumption Specifications

- Maximum Power Consumption (Multi-Core Operation) – 6 GHz: 65W; 7-8 GHz: 75W; 11 GHz: 65W; 13-15 GHz: 55W; 18-24 GHz: 48W; 26-42 GHz: 55W
- Maximum Power Consumption (1+0 Operation) – 6 GHz: 40W; 7-8 GHz: 50W; 11 GHz: 53W; 13-15 GHz: 41W; 18-24 GHz: 39W; 26-42 GHz: 41W

PoE Injector Mechanical Specifications

- Dimensions – 134mm(H), 190mm(W), 62mm(D), 1 kg

PoE Injector Environmental Specifications

- 33°C to +55°C (-45°C to +60°C extended)

PoE Injector Power Input Specifications

- Standard Input: -48 or +24 VDC (Optional)
- DC Input range: ±(18/40.5 to 60) VDC (+18VDC extended range is supported as part of the nominal +24VDC support)

PoE Injector Interfaces

- GbE Data Port supporting 10/100/1000Base-T
- Power-Over-Ethernet (PoE) Port
- DC Power Port –40V to -60V (a PoE supporting two redundant DC feeds each supporting ±(18-60)V is available)

* Planned for future release.
** Certification pending.

4 MW ODU SPECS
SCALE: NOT TO SCALE

T-Mobile
18400 E. 22ND AVENUE
AURORA, CO 80011

CROWN CASTLE
116 INVERNESS DR. EAST STE# 280
ENGLEWOOD, CO 80112

T-MOBILE SITE NUMBER:
DN02489A

BU #: **858480**
ZOD_ALLTEL_CO06
_FAR_GOLDEN_CRY

MILLION DOLLAR HIGHWAY
RIDGWAY, CO 81432

EXISTING 35.0 FT
MONOPOLE

ISSUED FOR:

REV	DATE	DRWN	DESCRIPTION	DES./QA
A	07-9-2018	JAS	PRELIMINARY	ELG
B	08-20-2018	JAS	PRELIMINARY	ELG
0	08-28-2018	JAS	CONSTRUCTION	ELG
1	10-30-2018	JAS	CONSTRUCTION	ELG
2	12-13-2018	JAS	CONSTRUCTION	ELG
3	03-29-2019	JAS	CONSTRUCTION	ELG
4	04-18-2019	JAS	CONSTRUCTION	ELG

COLORADO LICENSED
JACOB GORALSKI
PE.0049661
PROFESSIONAL ENGINEER

5/7/2019

JACOB GORALSKI, PLLC
CONSULTING ENGINEER
JACOB GORALSKI, PLLC
CO PE# 0049661
1106 COLBI ST.
KENNEDALE, TX 76060
(817) 456-2621

IT IS A VIOLATION OF LAW FOR ANY PERSON, UNLESS THEY ARE ACTING UNDER THE DIRECTION OF A LICENSED PROFESSIONAL ENGINEER, TO ALTER THIS DOCUMENT.

SHEET NUMBER: C-6
REVISION: 4

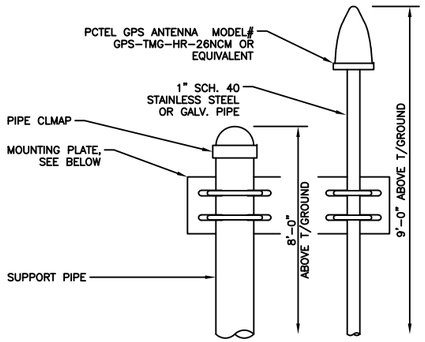

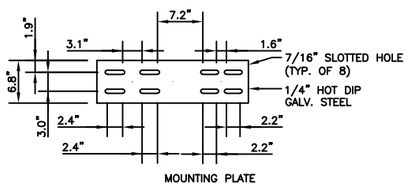

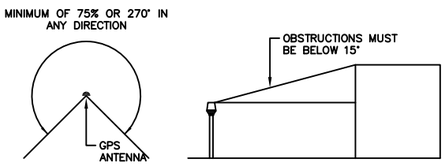

GPS MINIMUM SKY VIEW REQUIREMENTS

NOTES:

1. THE ELEVATION AND LOCATION OF THE GPS ANTENNA SHALL BE IN ACCORDANCE WITH THE FINAL RF REPORT.
2. THE GPS ANTENNA MOUNT IS DESIGNED TO FASTEN TO A STANDARD 1-1/4" O.D. SCHEDULE 40, GALVANIZED STEEL OR STAINLESS STEEL PIPE. THE PIPE MUST NOT BE THREADED AT THE ANTENNA MOUNT END. THE PIPE SHALL BE CUT TO THE REQUIRED LENGTH (MINIMUM OF 18 INCHES) USING A HAND OR ROTARY PIPE CUTTER TO ASSURE A SMOOTH AND PERPENDICULAR CUT. A HACK SAW SHALL NOT BE USED. THE CUT PIPE END SHALL BE DEBARRED AND SMOOTH IN ORDER TO SEAL AGAINST THE NEOPRENE GASKET ATTACHED TO THE ANTENNA MOUNT.
3. IT IS CRITICAL THAT THE GPS ANTENNA IS MOUNTED SUCH THAT IT IS WITHIN 2 DEGREES OF VERTICAL AND THE BASE OF THE ANTENNA IS WITHIN 2 DEGREES OF LEVEL.
4. DO NOT SWEEP TEST GPS ANTENNA.

1 GPS ANTENNA DETAIL
SCALE: NOT TO SCALE

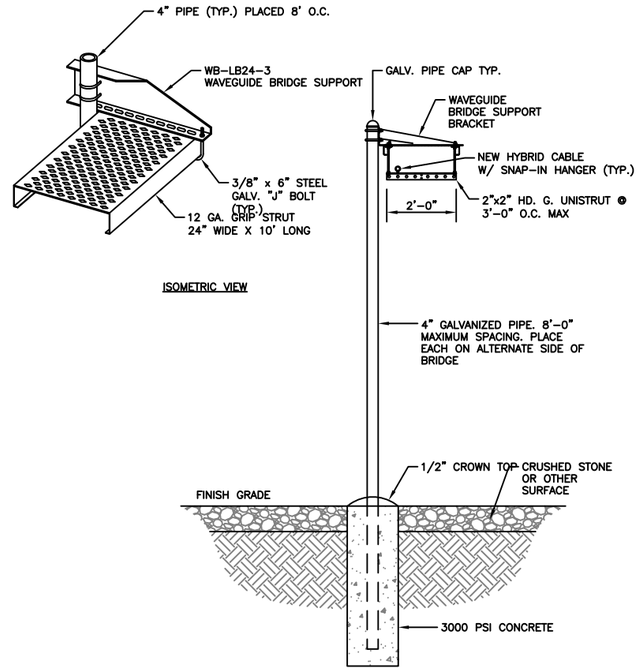

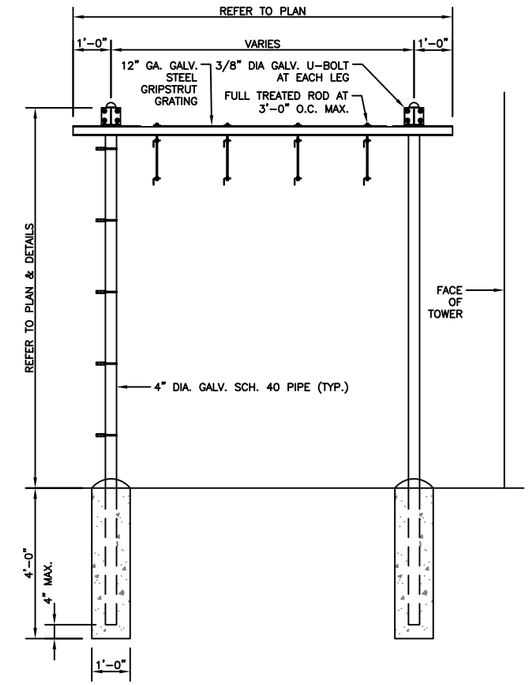

2 ICE BRIDGE DETAIL
SCALE: NOT TO SCALE

3 NOT USED
SCALE: NOT TO SCALE

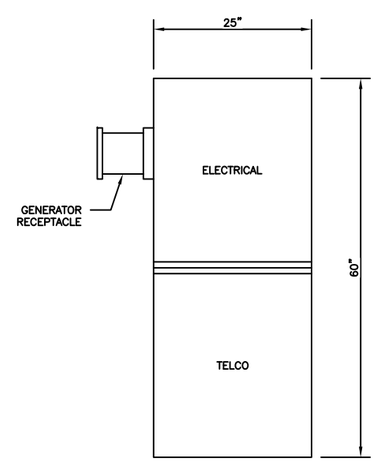

POWER PEDESTAL CABINET
200 A POWER TRANSFER CABINET W/O TELCO

GENERAL

CONSTRUCTION:	SINGLE LAYER AL. ENCLOSURE, TYPE 3R
DIMENSIONS (WxHxD):	20 x 40 x 10 INCH
WEIGHT:	APPROX. 75 LBS (WITHOUT PACKAGING)
FINISH:	POLYESTER POWDER PAINT
DOOR LATCH:	3-POINT LATCHING, PAD LOCKABLE
SAFETY:	UL50 (CABINET)

ENVIRONMENT

OPERATING TEMPERATURE:	-40°C TO +46°C (-40°F TO 115°F)
HUMIDITY (RELATIVE):	95%, NON-CONDENSING (MAX.)
PROTECTION CLASS:	TYPE 3R
AC SECTION	
VOLTAGE:	240/120V SINGLE PHASE (3 WIRE + GROUND)
CURRENT:	200A
AIC RATING:	UTILITY 65,000 AMPS, PANLOC 10,000 AMPS GENERATOR INTERFACE: PANLOC™ (LEFT MOUNT) SERVICE DISCONNECT: SQUARE D 200 AMP MANUAL TRANSFER SWITCH
OTHER FEATURES	LOAD CENTER: SQUARE D 200 AMP, QO SERIES, 24 POSITION SURGE PROTECTION DEVICE (SPD) - 1 EA. AC DATA 2080 SQUARE D 30 AMP, 2 POLE BREAKER FOR SPD GROUND BAR SILKSCREENED DEAD-FRONT CAPTIVE DEAD-FRONT FASTENERS

NOTE:

1. WEIGHT OF CABINET IS 150 LBS.
2. NORTHERN TECHNOLOGIES, INC. PPC#CS7S2-W836-R OR APPROVAL EQUAL. SEE PPC CABINET DIAGRAM (1/E-2) FOR BREAKER REQUIREMENTS.

NOTE:

1. WEIGHT OF CABINET IS 150 LBS.
2. NORTHERN TECHNOLOGIES, INC. PPC#CS7S2-W836-R OR APPROVAL EQUAL. SEE AC PANEL FOR BREAKER REQUIREMENTS.

4 PPC UNIT
SCALE: NOT TO SCALE

T-Mobile
18400 E. 22ND AVENUE
AURORA, CO 80011

CROWN CASTLE
116 INVERNESS DR. EAST STE# 280
ENGLEWOOD, CO 80112

T-MOBILE SITE NUMBER:
DN02489A

BU #: **858480**
ZOD_ALLTEL_CO06
_FAR_GOLDEN_CRY

MILLION DOLLAR HIGHWAY
RIDGWAY, CO 81432

EXISTING 35.0 FT
MONOPOLE

ISSUED FOR:

REV	DATE	DRWN	DESCRIPTION	DES./QA
A	07-9-2018	JAS	PRELIMINARY	ELG
B	08-20-2018	JAS	PRELIMINARY	ELG
0	08-28-2018	JAS	CONSTRUCTION	ELG
1	10-30-2018	JAS	CONSTRUCTION	ELG
2	12-13-2018	JAS	CONSTRUCTION	ELG
3	03-29-2019	JAS	CONSTRUCTION	ELG
4	04-18-2019	JAS	CONSTRUCTION	ELG

COLORADO LICENSED
JACOB GORALSKI
PE.0049661
PROFESSIONAL ENGINEER

5/7/2019

JACOB GORALSKI, PLLC
CONSULTING ENGINEER
JACOB GORALSKI, PLLC
CO PE# 0049661
1106 COLBI ST.
KENNEDALE, TX 76060
(817) 456-2621

IT IS A VIOLATION OF LAW FOR ANY PERSON, UNLESS THEY ARE ACTING UNDER THE DIRECTION OF A LICENSED PROFESSIONAL ENGINEER, TO ALTER THIS DOCUMENT.

SHEET NUMBER: C-7
REVISION: 4

NOKIA FLEX SYSTEM RADIO MODULES:
FBBC, FRIA, FRIE, FSME, FSMF, FXFB, FXFC

CLEARANCES: FRONT: 23.6"
BACK: 8"
TOP: 1.2"
SIDES: 4"
WEIGHT: 44 lbs.
NOTE: MODULE CAN BE INSTALLED VERTICALLY AND HORIZONTALLY

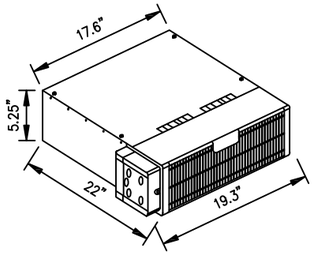

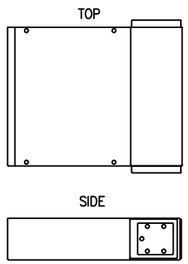

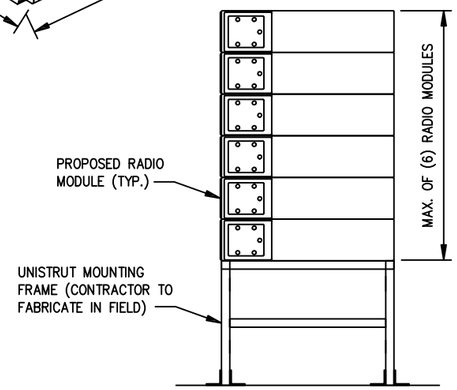

1 NOKIA FLEXI SYSTEM / RADIO MODULE STACKED SLEEVE DETAIL
SCALE: NOT TO SCALE

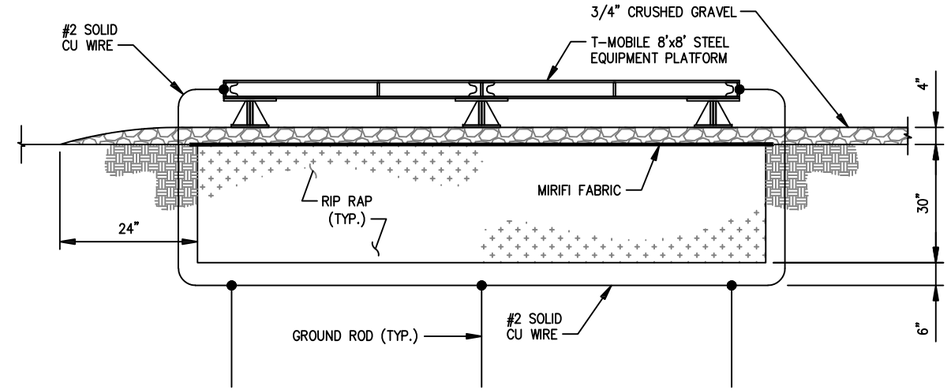

NOTE:
ROAD BASE BACKFILL COMPACTED ±95%

2 STEEL EQUIPMENT PLATFORM GROUND DETAIL
SCALE: NOT TO SCALE

AirScale Subrack Outdoor AMOB datasheet

Datasheet

Environmental protection	IP55

Feature description:

- Outdoor Subrack for AirScale System Module Indoor plug-in units
- High performance Heat Exchanger "HEX"
- Compatible with Flexi BTS mechanics stack/plinth/wall/pole/rack installation
- Compatible with the 3rd part 19" racks and cabinets if it follows clearances and airflow requirements
- Possible to install AMOB inside FCOA cabinet
- Service doors on front and rear sides

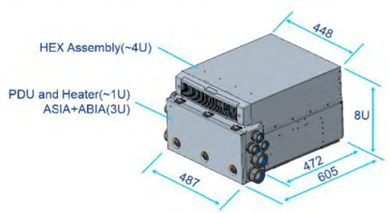

Height	8U (354 mm)
Width (front cover)	487mm
Width (cabinet)	448mm (fits into 19 inch rack) 487mm (without conduit plugs or fittings)
Depth	Total 605mm (472mm from rack mounting surface)
Weights	23 kg AMOB enclosure 3 kg ASIA (Core Module) 2 kg ABIA (Expansion Module) 32 kg ½ Capacity (1 Core + 3 Expansion) 41 kg Full Capacity (2 Core + 6 Expansion)
Ingress Protection	IP55
Operating Temperature	-40°C up to +55°C (without solar radiation)
Installation Temperature	-20°C - +55°C
Airflow Direction	Back to front airflow direction supported for Horizontal(FCOA, 19" rack, Flexi stack) Front to back airflow direction supported for Vertical(wall and pole mounting case)
Clearances for cooling	40 mm Minimum on the back and front side
Cold start	~2h from -40°C to -5°C *Optional 2nd heater can be added to meet NAM requirement, cold start from -40°C to -5°C in 1 hour instead of 2 hours
Nominal supply voltage Input voltage range	-40.5 ... -57 V DC Extended Service Voltage Range supported -36Vdc .. -60Vdc Floating
Volume	104.5L
Mass capacity	Support Max 18Kg inside
Power consumption	Typical max ~265W (all fans at highest speed) Cold start ~600W (heater On 55W + fans at low speed)
Conduit cable entry	2x1.5" + 3x 1" on each left and right side

3 © Nokia 2016 Confidential

3 AMOB SPECIFICATIONS
SCALE: NOT TO SCALE

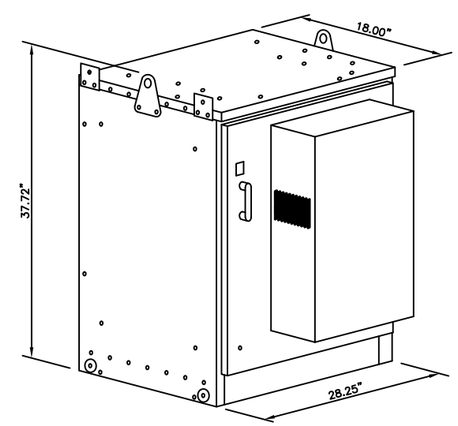

NOTES:
1. WEIGHT OF CABINET (WITHOUT BATTERIES) IS 232 LBS.
2. BASE FRAME NOT SHOWN.

4 200AMP SITE SUPPORT CABINET
SCALE: NOT TO SCALE

T-Mobile
18400 E. 22ND AVENUE
AURORA, CO 80011

CROWN CASTLE
116 INVERNESS DR. EAST STE# 280
ENGLEWOOD, CO 80112

T-MOBILE SITE NUMBER:
DN02489A

BU #: **858480**
ZOD_ALLTEL_CO06
_FAR_GOLDEN_CRY

MILLION DOLLAR HIGHWAY
RIDGWAY, CO 81432

EXISTING 35.0 FT
MONOPOLE

ISSUED FOR:

REVT	DATE	DRWN	DESCRIPTION	DES./QA
A	07-9-2018	JAS	PRELIMINARY	ELG
B	08-20-2018	JAS	PRELIMINARY	ELG
0	08-28-2018	JAS	CONSTRUCTION	ELG
1	10-30-2018	JAS	CONSTRUCTION	ELG
2	12-13-2018	JAS	CONSTRUCTION	ELG
3	03-29-2019	JAS	CONSTRUCTION	ELG
4	04-18-2019	JAS	CONSTRUCTION	ELG

COLORADO LICENSED
JACOB GORALSKI
PE.0049661
PROFESSIONAL ENGINEER

5/7/2019

JACOB GORALSKI, PLLC
CONSULTING ENGINEER
JACOB GORALSKI, PLLC
CO PE# 0049661
1106 COLBI ST.
KENNEDALE, TX 76060
(817) 456-2621

IT IS A VIOLATION OF LAW FOR ANY PERSON, UNLESS THEY ARE ACTING UNDER THE DIRECTION OF A LICENSED PROFESSIONAL ENGINEER, TO ALTER THIS DOCUMENT.

SHEET NUMBER: C-8
REVISION: 4

PV-MPM-TA
L.I.F.E MOUNT™ MONOPOLE T-ARM MOUNT

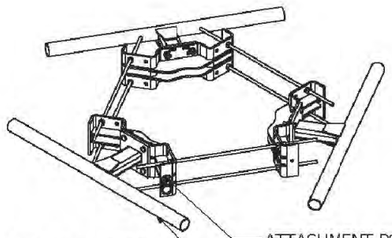

PV-MPM-TA12X63-B
ISO

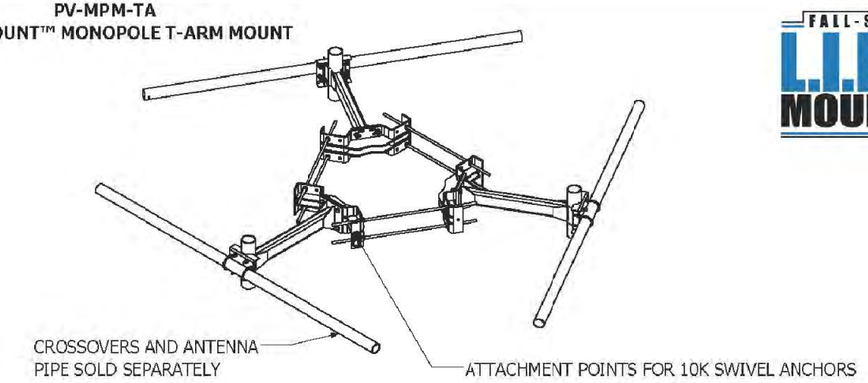

PV-MPM-TA36
ISO

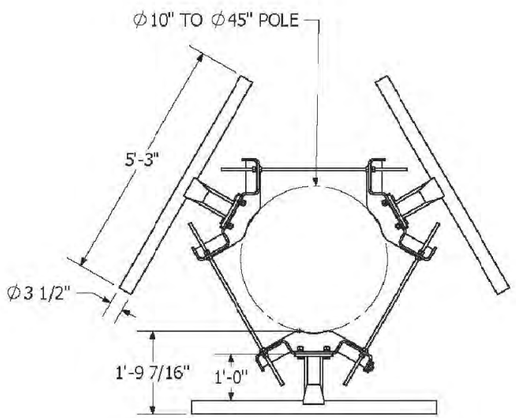

PV-MPM-TA12X63-B
TOP

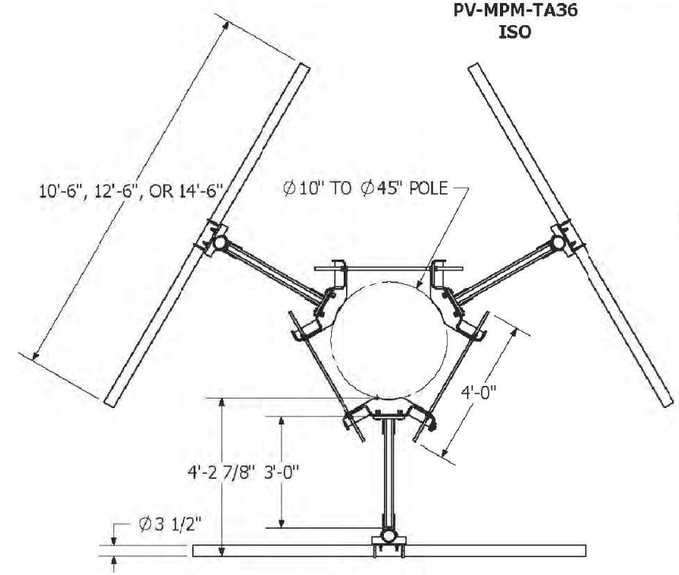

PV-MPM-TA36
TOP

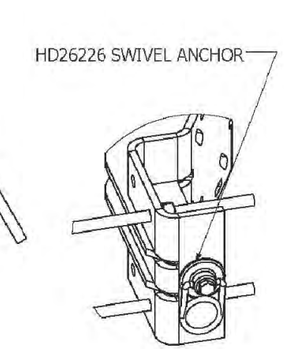

ANCHOR DETAIL

TABLE 1: MOUNT CONFIGURATIONS

Part Number	Description	Weight (lbs)	Included Parts							
			PV-RM1045	PV-TA12-312X63	PV-TA36	PV-XP3040-HD	PIPE-312X126	PIPE-312X150	PIPE-312X174	HD26226
PV-MPM-TA36-10-B	L.I.F.E Mount™ Monopole T-Arm, 10"-45' Pole, 36" Standoff, 10'6" Face	890	1	-	3	3	3	-	-	3
PV-MPM-TA36-12-B	L.I.F.E Mount™ Monopole T-Arm, 10"-45' Pole, 36" Standoff, 12'6" Face	936	1	-	3	3	-	3	-	3
PV-MPM-TA36-14-B	L.I.F.E Mount™ Monopole T-Arm, 10"-45' Pole, 36" Standoff, 14'6" Face	981	1	-	3	3	-	-	3	3
PV-MPM-TA12X63-B	L.I.F.E Mount™ Monopole T-Arm, 10"-45" Pole, 12" Standoff, 63" Face	529	1	3	-	-	-	-	-	3

10K SWIVEL ANCHOR ATTACHMENT NOTES:

- DO NOT INSTALL ANCHORS UNTIL AFTER RING MOUNT IS PROPERLY INSTALLED ON TOWER.
- DO NOT USE SWIVEL ANCHORS AS A RIGGING / LIFTING POINT.
- SWIVEL ANCHOR SPECS:
  - UTS:10,000 LBF
  - MAX USER WEIGHT: 310 LBS
  - WORKING LOAD: 2,000 LBS
- FOLLOW MANUFACTURER SPECIFICATIONS FOR ANCHOR INSTALLATION AND MAINTENANCE.

1 PERFECT 10 SFA14-4-96
SCALE: NOT TO SCALE

PERFECT VISION MANUFACTURING
16101 La Grande Dr.
Little Rock, AR 72223
(630)-201-4012

STAMP:

The information contained in this set of documents is proprietary by nature; any use or disclosure other than that which relates to the client named is strictly prohibited.

REVISIONS:

NO.	DATE	DESCRIPTION	BY	CHK	APD
5			DJN	AM	SS
4			DJN	AM	SS
3	10/14/16	INLUDE HD26226 IN BOM	DJN	AM	SS
2	2/25/16	L.I.F.E. MOUNT™ UPDATE	DJN	AM	SS
1	2/10/16	ADDED TA36 SERIES	DJN	AM	SS
0	11/24/15	INITIAL RELEASE	DJN	AM	SS

SITE INFORMATION:

DESIGN TYPE:
MONOPOLE T-ARM MOUNT

SHEET TITLE:
ENGINEERING DETAIL

SHEET TITLE: **E-1** REVISION: **3**

T-Mobile
18400 E. 22ND AVENUE
AURORA, CO 80011

CROWN CASTLE
116 INVERNESS DR. EAST STE# 280
ENGLEWOOD, CO 80112

T-MOBILE SITE NUMBER:
DN02489A

BU #: **858480**
ZOD_ALLTEL_CO06
_FAR_GOLDEN_CRY

MILLION DOLLAR HIGHWAY
RIDGWAY, CO 81432

EXISTING 35.0 FT
MONOPOLE

ISSUED FOR:

REV	DATE	DRWN	DESCRIPTION	DES./QA
A	07-9-2018	JAS	PRELIMINARY	ELG
B	08-20-2018	JAS	PRELIMINARY	ELG
0	08-28-2018	JAS	CONSTRUCTION	ELG
1	10-30-2018	JAS	CONSTRUCTION	ELG
2	12-13-2018	JAS	CONSTRUCTION	ELG
3	03-29-2019	JAS	CONSTRUCTION	ELG
4	04-18-2019	JAS	CONSTRUCTION	ELG

COLORADO LICENSED
JACOB GORALSKI
PE.0049661
PROFESSIONAL ENGINEER

5/7/2019

JACOB GORALSKI, PLLC
CONSULTING ENGINEER
JACOB GORALSKI, PLLC
CO PE# 0049661
1106 COLBI ST.
KENNEDALE, TX 76060
(817) 456-2621

IT IS A VIOLATION OF LAW FOR ANY PERSON, UNLESS THEY ARE ACTING UNDER THE DIRECTION OF A LICENSED PROFESSIONAL ENGINEER, TO ALTER THIS DOCUMENT.

SHEET NUMBER: **C-9** REVISION: **4**

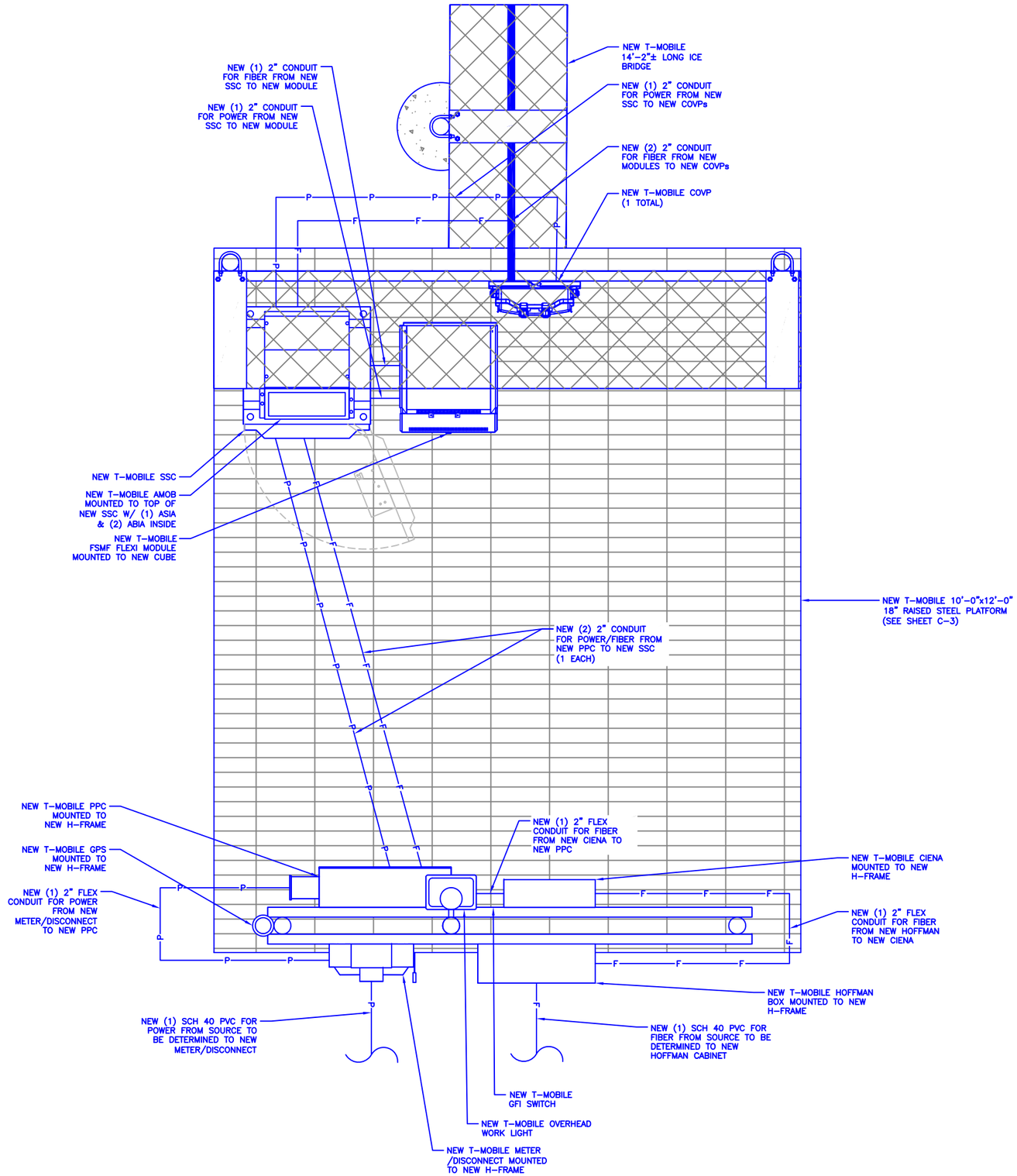

1 ELECTRICAL PLAN
SCALE: NOT TO SCALE

T-Mobile
18400 E. 22ND AVENUE
AURORA, CO 80011

CROWN CASTLE
116 INVERNESS DR. EAST STE# 280
ENGLEWOOD, CO 80112

T-MOBILE SITE NUMBER:
DN02489A

BU #: **858480**
ZOD_ALLTEL_CO06
_FAR_GOLDEN_CRY

MILLION DOLLAR HIGHWAY
RIDGWAY, CO 81432

EXISTING 35.0 FT
MONOPOLE

ISSUED FOR:

REV	DATE	DRWN	DESCRIPTION	DES./QA
A	07-9-2018	JAS	PRELIMINARY	ELG
B	08-20-2018	JAS	PRELIMINARY	ELG
0	08-28-2018	JAS	CONSTRUCTION	ELG
1	10-30-2018	JAS	CONSTRUCTION	ELG
2	12-13-2018	JAS	CONSTRUCTION	ELG
3	03-29-2019	JAS	CONSTRUCTION	ELG
4	04-18-2019	JAS	CONSTRUCTION	ELG

COLORADO LICENSED
JACOB GORALSKI
PE.0049661
PROFESSIONAL ENGINEER

5/7/2019

JACOB GORALSKI, PLLC
CONSULTING ENGINEER
JACOB GORALSKI, PLLC
CO PE# 0049661
1106 COLBI ST.
KENNEDALE, TX 76060
(817) 456-2621

IT IS A VIOLATION OF LAW FOR ANY PERSON, UNLESS THEY ARE ACTING UNDER THE DIRECTION OF A LICENSED PROFESSIONAL ENGINEER, TO ALTER THIS DOCUMENT.

SHEET NUMBER: E-1
REVISION: 4

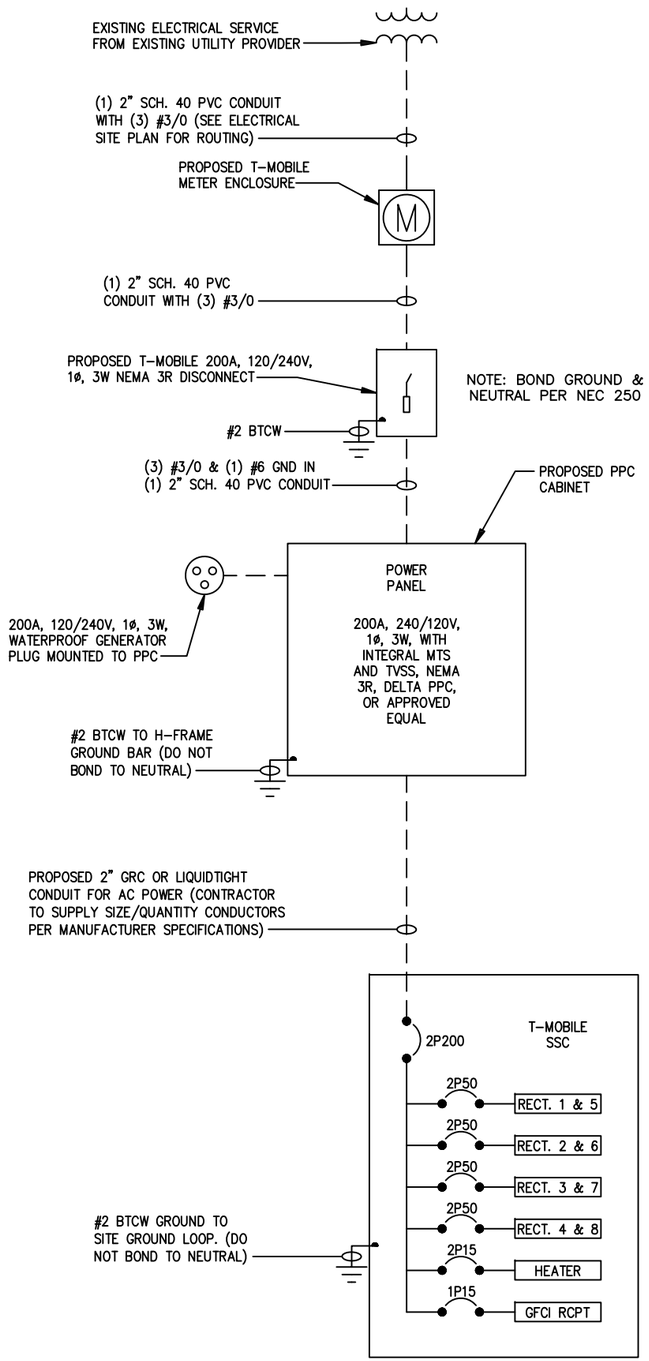

NOTE:
CONTRACTOR TO COORDINATE WITH LOCAL UTILITY PROVIDER PRIOR TO CONSTRUCTION

1 ELECTRICAL ONE LINE DIAGRAM
SCALE: NOT TO SCALE

PANEL: PPC

120/240 VOLTS, 1 PHASE, 3 WIRE, S/N, 200A AMP MCB NEMA 3R ENCL

MINIMUM AIC RATING – 22,000A

DESCRIPTION	BKR	POLE	CKT	VA	Φ	VA	CKT	POLE	BKR	DESCRIPTION
SURGE PROTECTOR	30	2	1	--	A	50	2	1	10	FAN
2P BRANCH	--	--	3	--	B		4			SPACE
RECEPTACLE/LIGHTS	15	1	5	230	A		6			SPACE
SPACE	20	1	7		B	1000	8	2	20	HEATER
SPACE			9		A	1000	10	--	--	2P BRANCH
SPACE			11		B	15,000	12	2	200	(N) DELTA SUPPORT CABINET
SPACE			13		A	15,000	14	--	--	--
SPACE			15		B	--	16	--	--	2P BRANCH
SPACE			17		A	--	18	--	--	--
SPACE			19		B	--	20	--	--	--
SPACE			21		A	--	22	--	--	--
SPACE			23		B	--	24	--	--	--

PANEL LOAD CALCULATIONS:

LIGHTS: 50 VOLTAMPS x 1.25 = 63 VA
RECEPTACLE: 180 VOLTAMPS x 1.00 = 180 VA
MISC. EQUIPMENT: 32050 VOLTAMPS x 1.00 = 32,050 VA

TOTAL CALCULATED CONNECTED LOAD: 32,280 VA
TOTAL CALCULATED DEMAND LOAD: 32,293 VA

TOTAL CALCULATED DEMAND LOAD: 135A 120/240V 1PH 3W

2 BREAKER PANEL SCHEDULE
SCALE: NOT TO SCALE

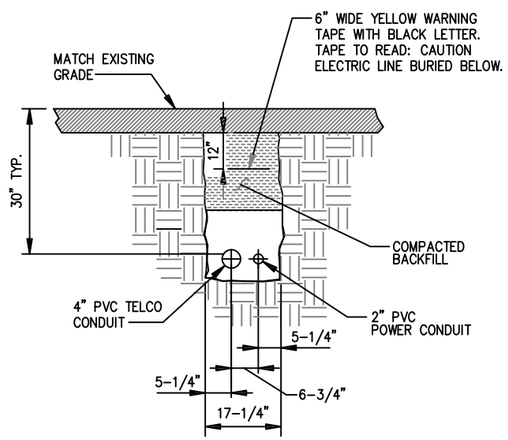

NOTE:
NUMBER AND SIZE OF CONDUITS MAY VARY. SEE DWG E-1 FOR CONDUIT SIZE AND LOCATION. CONFIRM DIMENSIONS SHOWN WITH UTILITY COMPANY

3 CONDUIT TRENCH DETAIL
SCALE: NOT TO SCALE

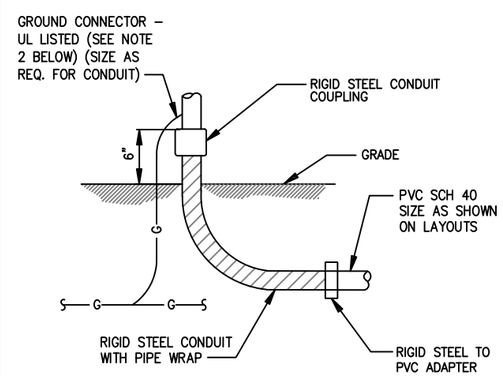

NOTES:
1. ALL CONDUIT ABOVE GRADE MUST BE RIGID STEEL OR LIQUIDTIGHT.
2. ALL NEW STRUCTURAL STEEL SHALL BE HOT DIP GALVANIZED IN ACCORDANCE WITH ASTM A123 G90 AFTER FABRICATION.
3. FIELD ABRASIONS SHALL BE TOUCH UP PAINTED WITH ZINC RICH GALVANIZING REPAIR PAINT IN ACCORDANCE WITH ASTM A780.
4. ALL EXPOSED ENDS OF CONDUITS SHALL HAVE WEATHER PROOF CAPS. DO NOT USE DUCT TAPE.
5. PROVIDE 200LB. TEST PULL WIRES IN EACH TELEPHONE AND POWER CONDUIT. STUB CONDUITS INTO ENCLOSURE AND LABEL.

4 UNDERGROUND CONDUIT STUB-UP
SCALE: NOT TO SCALE

T-Mobile
18400 E. 22ND AVENUE
AURORA, CO 80011

CROWN CASTLE
116 INVERNESS DR. EAST STE# 280
ENGLEWOOD, CO 80112

T-MOBILE SITE NUMBER:
DN02489A

BU #: **858480**
ZOD_ALLTEL_CO06
_FAR_GOLDEN_CRY

MILLION DOLLAR HIGHWAY
RIDGWAY, CO 81432

EXISTING 35.0 FT MONOPOLE

ISSUED FOR:

REV	DATE	DRWN	DESCRIPTION	DES./QA
A	07-9-2018	JAS	PRELIMINARY	ELG
B	08-20-2018	JAS	PRELIMINARY	ELG
0	08-28-2018	JAS	CONSTRUCTION	ELG
1	10-30-2018	JAS	CONSTRUCTION	ELG
2	12-13-2018	JAS	CONSTRUCTION	ELG
3	03-29-2019	JAS	CONSTRUCTION	ELG
4	04-18-2019	JAS	CONSTRUCTION	ELG

COLORADO LICENSED
JACOB GORALSKI
PE.0049661
PROFESSIONAL ENGINEER

5/7/2019

JACOB GORALSKI, PLLC
CONSULTING ENGINEER
JACOB GORALSKI, PLLC
CO PE# 0049661
1106 COLBI ST.
KENNEDALE, TX 76060
(817) 456-2621

IT IS A VIOLATION OF LAW FOR ANY PERSON, UNLESS THEY ARE ACTING UNDER THE DIRECTION OF A LICENSED PROFESSIONAL ENGINEER, TO ALTER THIS DOCUMENT.

SHEET NUMBER: E-2
REVISION: 4

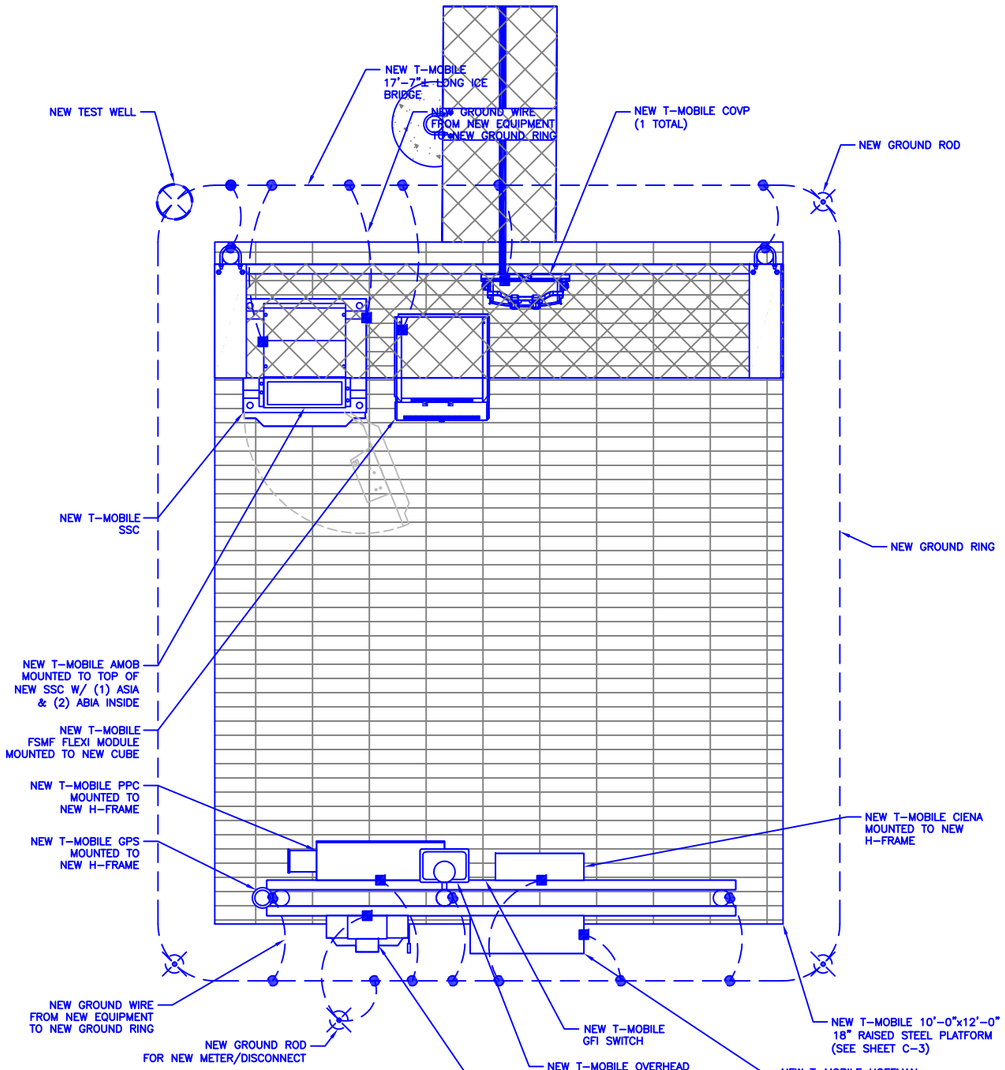

GROUNDING LEGEND

- INSPECTION WELL VERIFY LOCATION W/ CONSTR. MGR.
- 5/8"x10'-0" COPPER CLAD GROUND ROD, 10' O.C. (TYP)
- #6 AWG STRANDED & INSULATED
- #2 AWG SOLID COPPER TINNED
- GROUND BUS BAR
- EXOTHERMIC WELD (CADWELD) (UNLESS OTHERWISE NOTED)
- MECHANICAL CONNECTION

1 EQUIPMENT GROUNDING DIAGRAM
SCALE: NOT TO SCALE

N

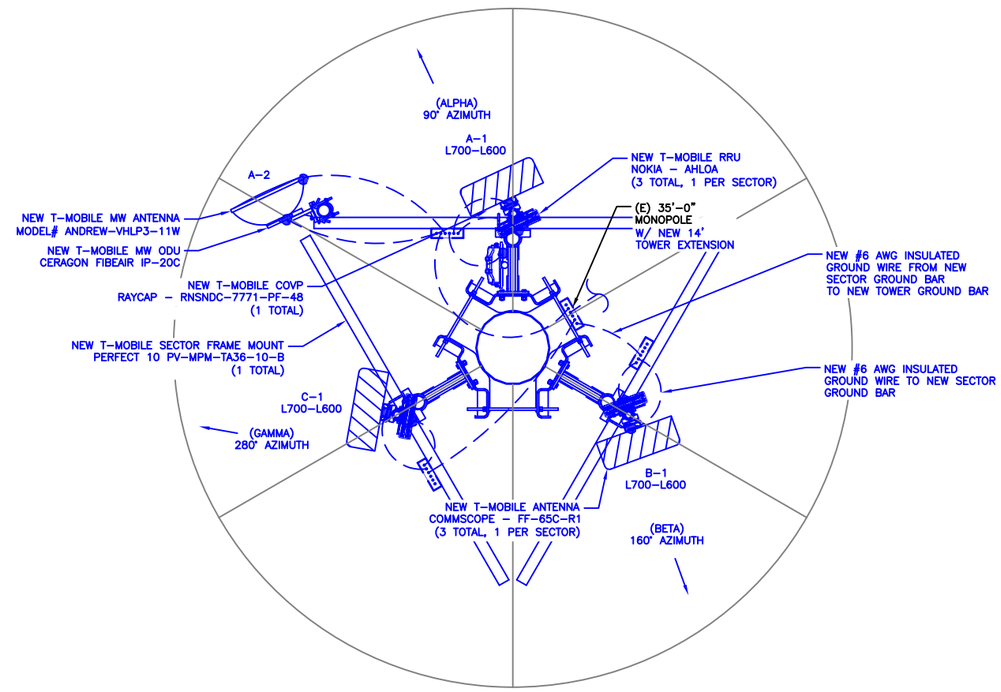

GROUNDING LEGEND

- MECHANICAL CONNECTION
- #6 AWG STRANDED & INSULATED
- GROUND BUS BAR

2 ANTENNA GROUNDING PLAN
SCALE: NOT TO SCALE

N

T-Mobile
18400 E. 22ND AVENUE
AURORA, CO 80011

CROWN CASTLE
116 INVERNESS DR. EAST STE# 280
ENGLEWOOD, CO 80112

T-MOBILE SITE NUMBER:
DN02489A

BU #: **858480**
ZOD_ALLTEL_CO06
_FAR_GOLDEN_CRY

MILLION DOLLAR HIGHWAY
RIDGWAY, CO 81432

EXISTING 35.0 FT
MONOPOLE

ISSUED FOR:

REV	DATE	DRWN	DESCRIPTION	DES./QA
A	07-9-2018	JAS	PRELIMINARY	ELG
B	08-20-2018	JAS	PRELIMINARY	ELG
0	08-28-2018	JAS	CONSTRUCTION	ELG
1	10-30-2018	JAS	CONSTRUCTION	ELG
2	12-13-2018	JAS	CONSTRUCTION	ELG
3	03-29-2019	JAS	CONSTRUCTION	ELG
4	04-18-2019	JAS	CONSTRUCTION	ELG

COLORADO LICENSED
JACOB GORALSKI
PE.0049661
PROFESSIONAL ENGINEER

5/7/2019

JACOB GORALSKI, PLLC
CONSULTING ENGINEER
JACOB GORALSKI, PLLC
CO PE# 0049661
1106 COLBI ST.
KENNEDALE, TX 76060
(817) 456-2621

IT IS A VIOLATION OF LAW FOR ANY PERSON, UNLESS THEY ARE ACTING UNDER THE DIRECTION OF A LICENSED PROFESSIONAL ENGINEER, TO ALTER THIS DOCUMENT.

SHEET NUMBER: G-1
REVISION: 4

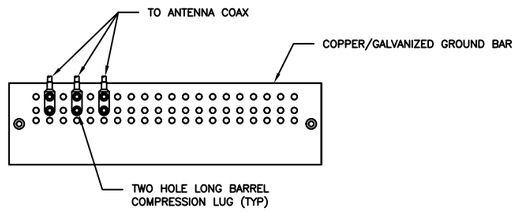

NOTES:

1. DOUBLING UP "OR STACKING" OF CONNECTIONS IS NOT PERMITTED.
2. EXTERIOR ANTIOXIDANT JOINT COMPOUND TO BE USED ON ALL EXTERIOR CONNECTIONS.
3. GROUND BAR SHALL NOT BE ISOLATED FROM TOWER. MOUNT DIRECTLY TO TOWER STEEL.

1 ANTENNA GROUND BAR DETAIL
SCALE: NOT TO SCALE

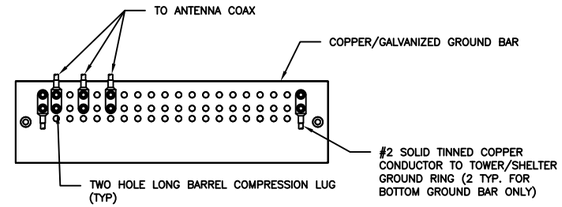

NOTES:

1. EXTERIOR ANTIOXIDANT JOINT COMPOUND TO BE USED ON ALL EXTERIOR CONNECTIONS.
2. GROUND BAR SHALL NOT BE ISOLATED FROM TOWER. MOUNT DIRECTLY TO TOWER STEEL (TOWER ONLY).
3. GROUND BAR SHALL BE ISOLATED FROM BUILDING OR SHELTER.

2 TOWER/SHELTER GROUND BAR DETAIL
SCALE: NOT TO SCALE

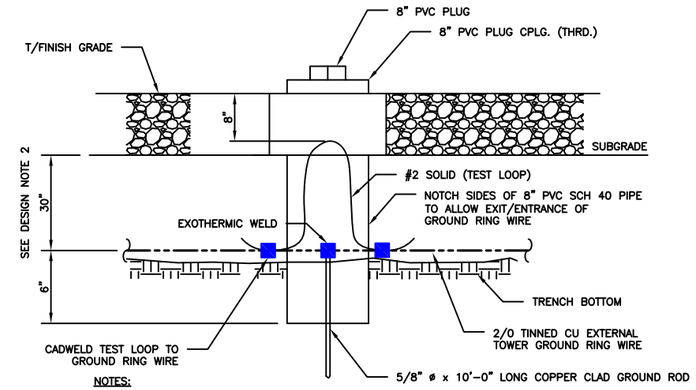

NOTES:

1. GROUND ROD SHALL BE DRIVEN VERTICALLY, NOT TO EXCEED 45 DEGREES FROM THE VERTICAL
2. GROUND WIRE SHALL BE MIN. 30" BELOW GRADE OR 6" BELOW FROST LINE. (WHICH EVER IS GREATER) AS PER N.E.C. ARTICLE 250-50(D)

3 INSPECTION WELL DETAIL
SCALE: NOT TO SCALE

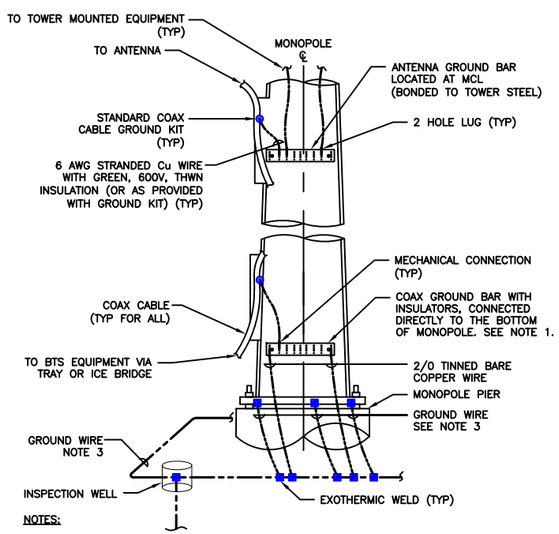

NOTES:

1. NUMBER OF GROUNDING BARS MAY VARY DEPENDING ON THE TYPE OF TOWER, ANTENNA LOCATIONS AND CONNECTION ORIENTATION. COAXIAL CABLES EXCEEDING 200 FEET ON THE TOWER SHALL HAVE GROUND KITS AT THE MIDPOINT. PROVIDE AS REQUIRED.
2. ONLY MECHANICAL CONNECTIONS ARE ALLOWED TO BE MADE TO CROWN CASTLE TOWERS. ALL MECHANICAL CONNECTIONS SHALL BE TREATED WITH AN ANTI-OXIDANT COATING.
3. ALL TOWER GROUNDING SYSTEMS SHALL COMPLY WITH THE REQUIREMENTS OF THE RECOGNIZED EDITION OF ANSI/TIA 222 AND NFPA 780.

4 TYPICAL ANTENNA CABLE GROUNDING
SCALE: NOT TO SCALE

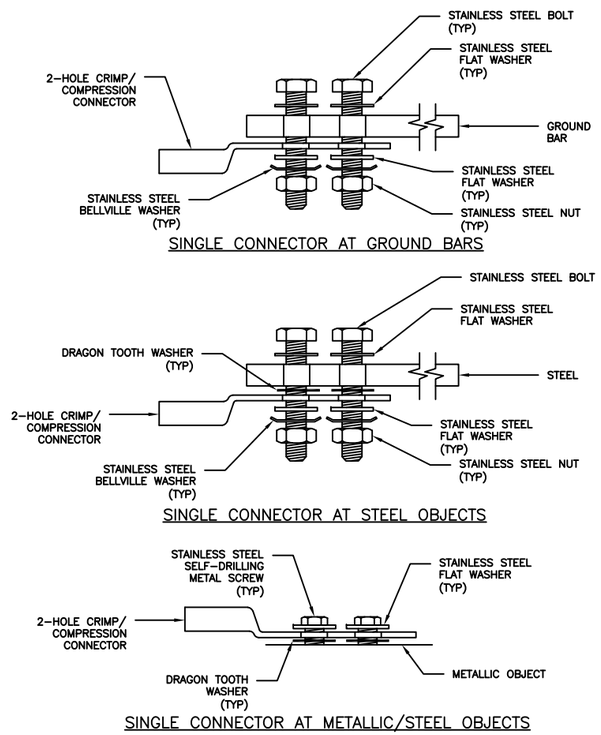

5 HARDWARE DETAIL FOR EXTERIOR CONNECTIONS
SCALE: NOT TO SCALE

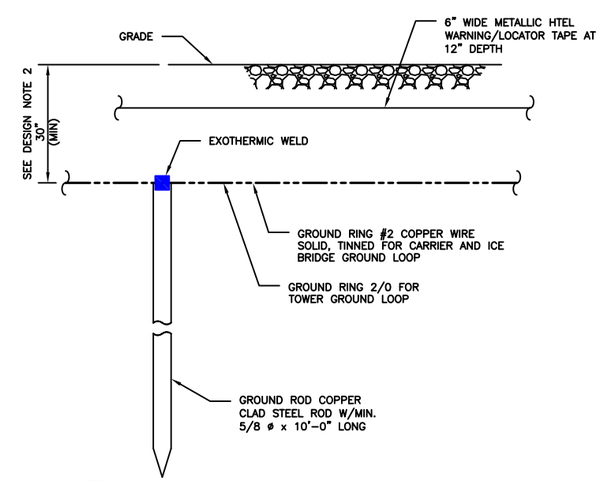

NOTES:

1. GROUND ROD SHALL BE DRIVEN VERTICALLY, NOT TO EXCEED 45 DEGREES FROM THE VERTICAL
2. GROUND WIRE SHALL BE MIN. 30" BELOW GRADE OR 6" BELOW FROST LINE. (WHICH EVER IS GREATER) AS PER N.E.C. ARTICLE 250-50(D)

6 GROUND ROD DETAIL
SCALE: NOT TO SCALE

T-Mobile
18400 E. 22ND AVENUE
AURORA, CO 80011

CROWN CASTLE
116 INVERNESS DR. EAST STE# 280
ENGLEWOOD, CO 80112

T-MOBILE SITE NUMBER:
DN02489A

BU #: **858480**
ZOD_ALLTEL_CO06
_FAR_GOLDEN_CRY

MILLION DOLLAR HIGHWAY
RIDGWAY, CO 81432

EXISTING 35.0 FT
MONOPOLE

ISSUED FOR:

REV	DATE	DRWN	DESCRIPTION	DES./QA
A	07-9-2018	JAS	PRELIMINARY	ELG
B	08-20-2018	JAS	PRELIMINARY	ELG
0	08-28-2018	JAS	CONSTRUCTION	ELG
1	10-30-2018	JAS	CONSTRUCTION	ELG
2	12-13-2018	JAS	CONSTRUCTION	ELG
3	03-29-2019	JAS	CONSTRUCTION	ELG
4	04-18-2019	JAS	CONSTRUCTION	ELG

COLORADO LICENSED
JACOB GORALSKI
PE.0049661
PROFESSIONAL ENGINEER

5/7/2019

JACOB GORALSKI, PLLC
CONSULTING ENGINEER
JACOB GORALSKI, PLLC
CO PE# 0049661
1106 COLBI ST.
KENNEDALE, TX 76060
(817) 456-2621

IT IS A VIOLATION OF LAW FOR ANY PERSON, UNLESS THEY ARE ACTING UNDER THE DIRECTION OF A LICENSED PROFESSIONAL ENGINEER, TO ALTER THIS DOCUMENT.

SHEET NUMBER: G-2
REVISION: 4

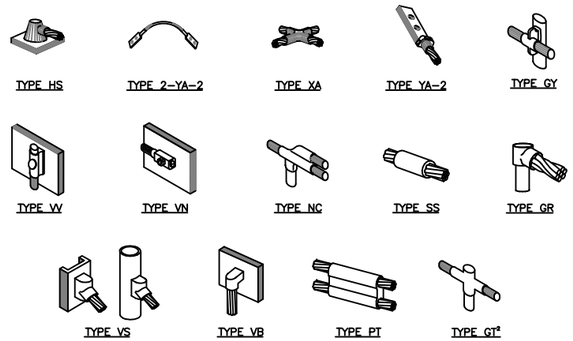

NOTE:

1. ERICO EXOTHERMIC "MOLD TYPES" SHOWN HERE ARE EXAMPLES. CONSULT WITH CONSTRUCTION MANAGER FOR SPECIFIC MOLDS TO BE USED FOR THIS PROJECT.
2. MOLD TYPE ONLY TO BE USED BELOW GRADE WHEN CONNECTING GROUND RING TO GROUND ROD.

1 CADWELD GROUNDING CONNECTIONS
SCALE: NOT TO SCALE

WIRE SIZE	BURNDY LUG	BOLT SIZE
#6 AWG GREEN INSULATED	YA6C-2TC38	3/8" - 16 NC S 2 BOLT
#2 AWG SOLID TINNED	YA3C-2TC38	3/8" - 16 NC S 2 BOLT
#2 AWG STRANDED	YA2C-2TC38	3/8" - 16 NC S 2 BOLT
#2/0 AWG STRANDED	YA26-2TC38	3/8" - 16 NC S 2 BOLT
#4/0 AWG STRANDED	YA28-2N	1/2" - 16 NC S 2 BOLT

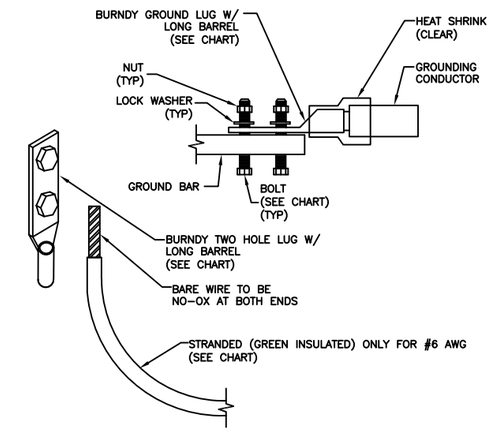

NOTES:

1. ALL GROUNDING LUGS ARE TO BE INSTALLED PER MANUFACTURER'S SPECIFICATIONS. ALL HARDWARE BOLTS, NUTS, LOCK WASHERS SHALL BE STAINLESS STEEL. ALL HARDWARE ARE TO BE AS FOLLOWS: BOLT, FLAT WASHER,GROUND BAR, GROUND LUG, FLAT WASHER AND NUT.

2 MECHANICAL LUG CONNECTION
SCALE: NOT TO SCALE

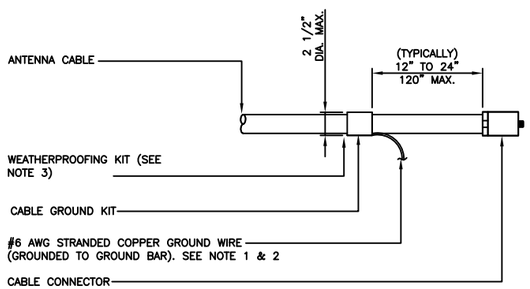

NOTES:

1. DO NOT INSTALL CABLE GROUND KIT AT A BEND AND ALWAYS DIRECT GROUND WIRE DOWN TO GROUND BAR.
2. GROUNDING KIT SHALL BE TYPE AND PART NUMBER AS SUPPLIED OR RECOMMENDED BY CABLE MANUFACTURER.
3. WEATHER PROOFING SHALL BE TWO-PART TAPE KIT, COLD SHRINK SHALL NOT BE USED.

3 CABLE GROUND KIT CONNECTION
SCALE: NOT TO SCALE

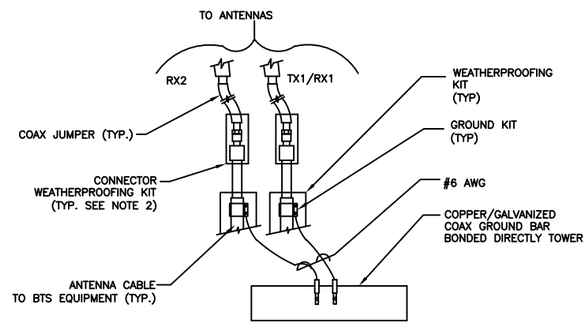

NOTES:

1. DO NOT INSTALL CABLE GROUND KIT AT A BEND AND ALWAYS DIRECT GROUND WIRE DOWN TO ANTENNA GROUND BAR.
2. WEATHER PROOFING SHALL BE TWO-PART TAPE KIT. COLD SHRINK SHALL NOT BE USED.

4 GROUND CABLE CONNECTION
SCALE: NOT TO SCALE

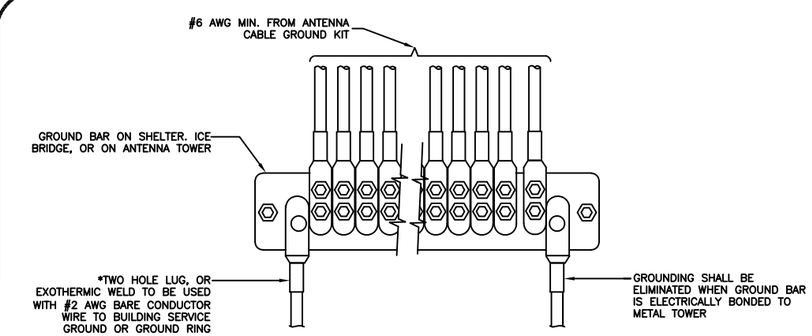

5 GROUNDWIRE INSTALLATION
SCALE: NOT TO SCALE

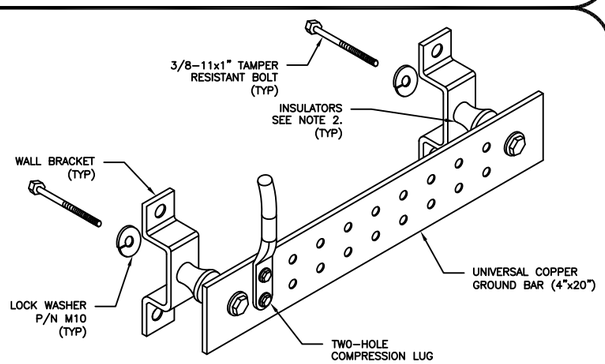

NOTES:

1. DOWN LEAD (HOME RUN) CONDUCTORS ARE NOT TO BE INSTALLED ON CROWN CASTLE TOWER, PER THE GROUNDING DOWN CONDUCTOR POLICY QAS-STD-10091. NO MODIFICATION OR DRILLING TO TOWER STEEL IS ALLOWED IN ANY FORM OR FASHION, CAD-WELDING ON THE TOWER AND/OR IN THE AIR ARE NOT PERMITTED.
2. OMIT INSULATOR WHEN MOUNTING TO TOWER STEEL OR PLATFORM STEEL USE INSULATORS WHEN ATTACHING TO BUILDING OR SHELTERS.

6 GROUND BAR DETAIL
SCALE: NOT TO SCALE

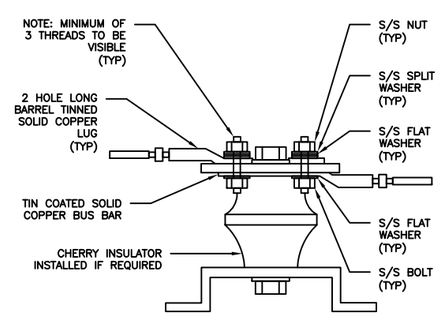

7 LUG DETAIL
SCALE: NOT TO SCALE

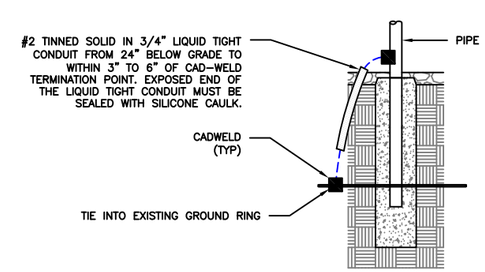

8 TRANSITIONING GROUND DETAIL
SCALE: NOT TO SCALE

T-Mobile
18400 E. 22ND AVENUE
AURORA, CO 80011

CROWN CASTLE
116 INVERNESS DR. EAST STE# 280
ENGLEWOOD, CO 80112

T-MOBILE SITE NUMBER:
DN02489A

BU #: **858480**
ZOD_ALLTEL_CO06
_FAR_GOLDEN_CRY

MILLION DOLLAR HIGHWAY
RIDGWAY, CO 81432

EXISTING 35.0 FT
MONOPOLE

ISSUED FOR:

REV	DATE	DRWN	DESCRIPTION	DES./QA
A	07-9-2018	JAS	PRELIMINARY	ELG
B	08-20-2018	JAS	PRELIMINARY	ELG
0	08-28-2018	JAS	CONSTRUCTION	ELG
1	10-30-2018	JAS	CONSTRUCTION	ELG
2	12-13-2018	JAS	CONSTRUCTION	ELG
3	03-29-2019	JAS	CONSTRUCTION	ELG
4	04-18-2019	JAS	CONSTRUCTION	ELG

COLORADO LICENSED
JACOB GORALSKI
PE.0049661
PROFESSIONAL ENGINEER

5/7/2019

JACOB GORALSKI, PLLC
CONSULTING ENGINEER
JACOB GORALSKI, PLLC
CO PE# 0049661
1106 COLBI ST.
KENNEDALE, TX 76060
(817) 456-2621

IT IS A VIOLATION OF LAW FOR ANY PERSON, UNLESS THEY ARE ACTING UNDER THE DIRECTION OF A LICENSED PROFESSIONAL ENGINEER, TO ALTER THIS DOCUMENT.

SHEET NUMBER: G-3
REVISION: 4

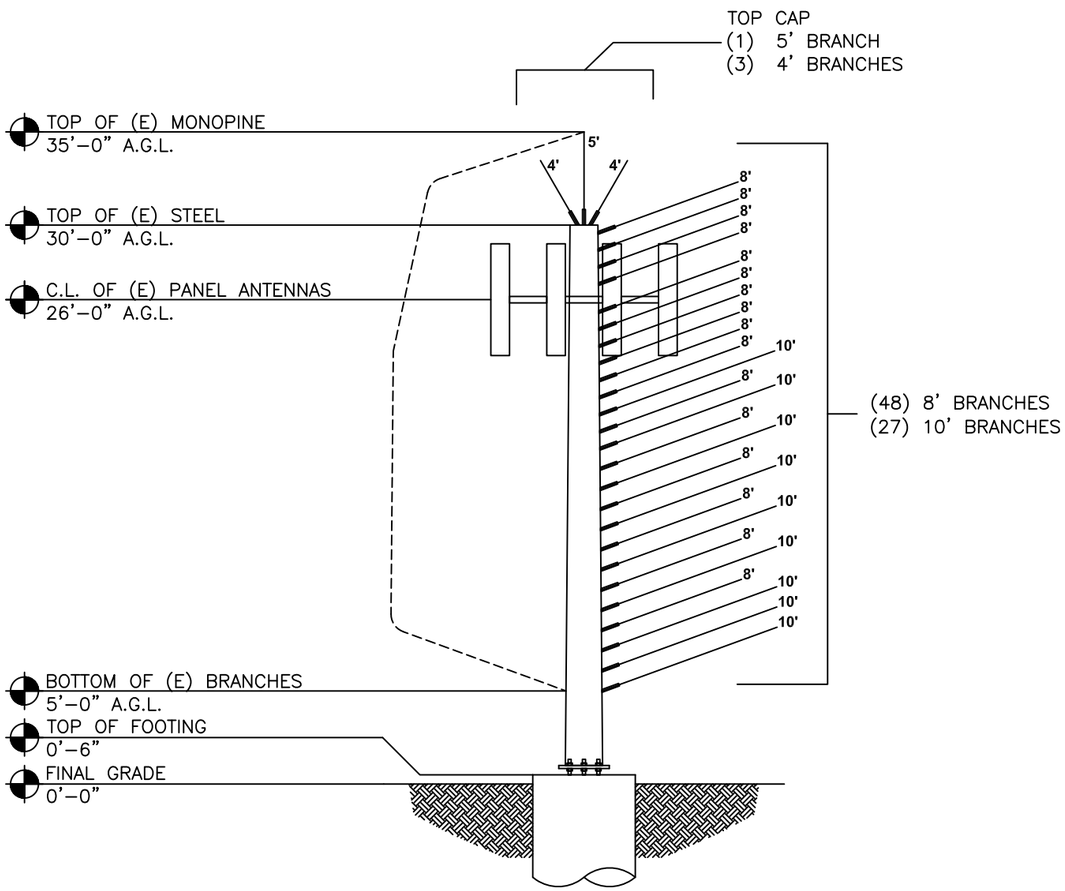

EXISTING MONOPINE STRUCTURAL ELEVATION VIEW | SCALE: NONE | 1

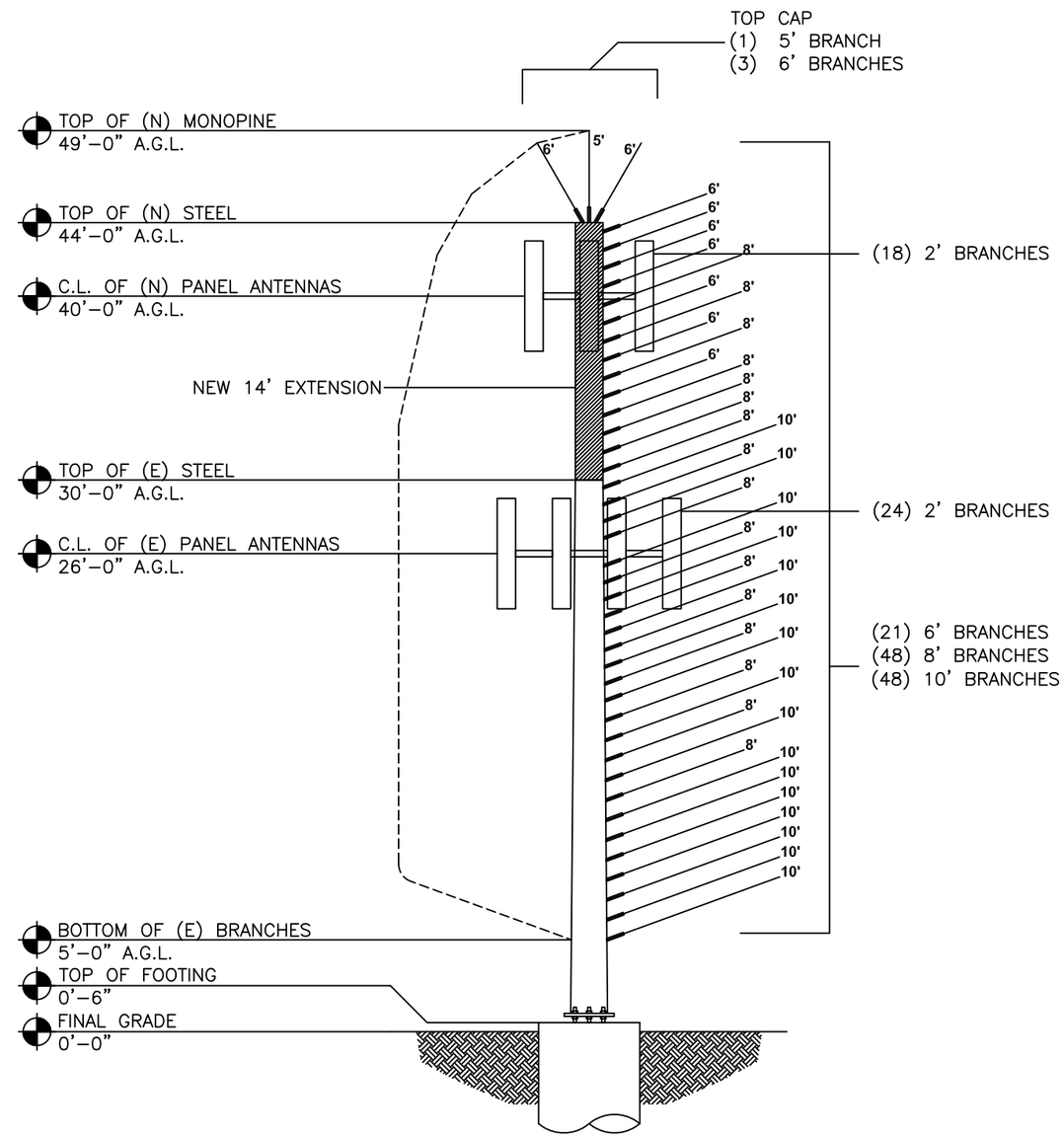

NEW MONOPINE STRUCTURAL ELEVATION VIEW | SCALE: NONE | 2

CONSULTANT

SOLAR COMMUNICATIONS INTERNATIONAL, INC.
8885 RIO SAN DIEGO DR.
Suite 207, San Diego, CA 92108
Tel: (619) 243-2750; Fax: (619) 243-2749
www.RFTransparent.com

COPYRIGHT 2006 SOLAR COMMUNICATIONS INTERNATIONAL, INC.
THESE MATERIALS ARE PROTECTED BY UNITED STATES COPYRIGHT LAW AND MAY NOT BE REPRODUCED, DISTRIBUTED, TRANSMITTED, DISPLAYED, OR PUBLISHED WITHOUT THE PRIOR WRITTEN PERMISSION OF SOLAR COMMUNICATIONS INTERNATIONAL, INC. YOU MAY NOT ALTER OR REMOVE ANY TRADEMARK, COPYRIGHT OR OTHER NOTICE FROM COPIES OF THIS CONTENT.

CLIENT

PROJECT
55' RFTRANSPARENT MONOPINE

LOCATION
ZOD ALLTEL CO06 GOLDEN CRY EXT.
#858480
MILLION DOLLAR HIGHWAY
RIDGWAY, CO 814323

ISSUED FOR
PRODUCTION

DW'N BY	CK'D BY	DATE
LEM	LEM	07SEP18

REVISIONS

REV.	CHANGES	DATE	BY
A	14' EXTENSION	29MAR19	LEM

ENGINEER SEAL

SHEET TITLE
ELEVATION VIEW

WSC PROJECT NUMBER

DRAWING NUMBER

PAGE NUMBER
RF-1

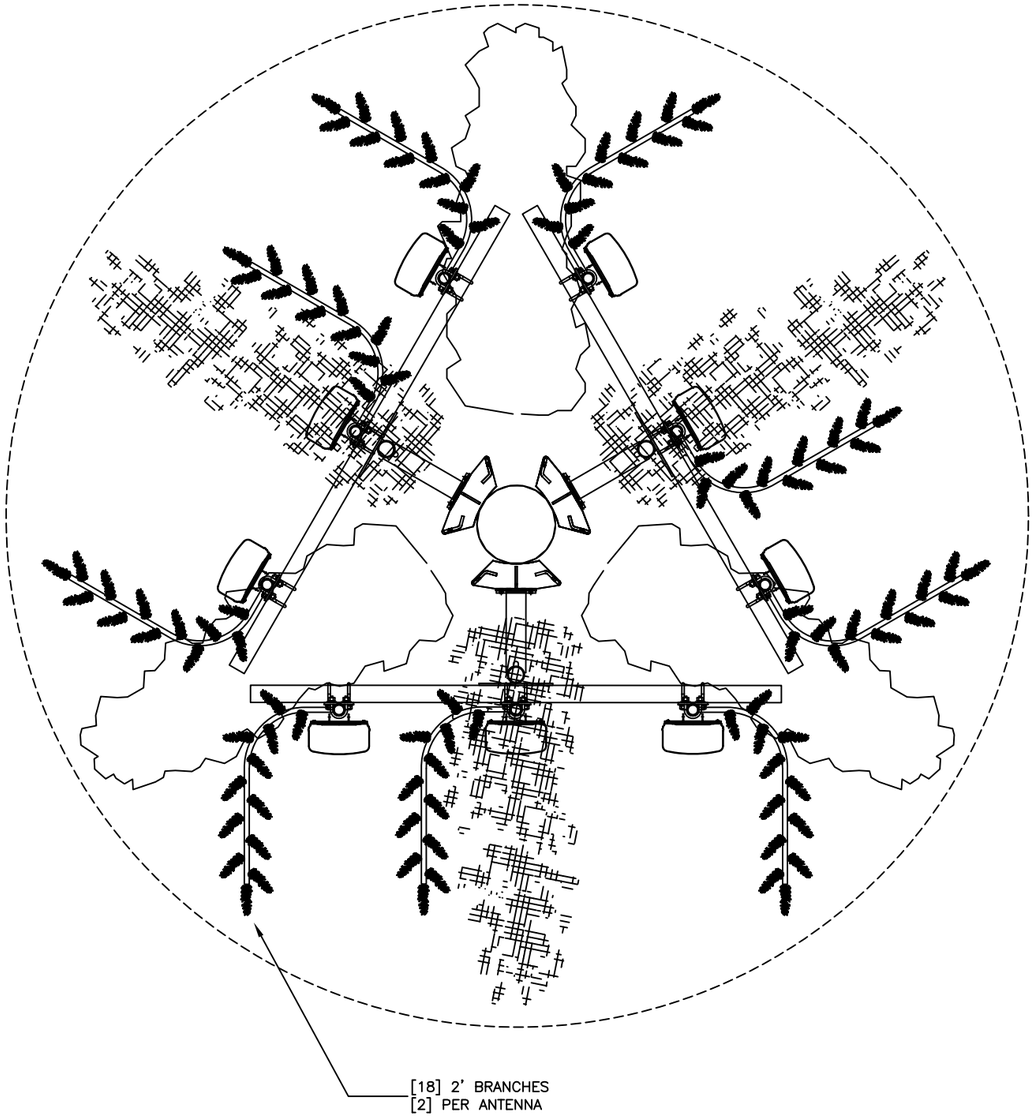

NEW ANTENNA PLAN VIEW AT 40'-0" AGL

SCALE: NONE | 1

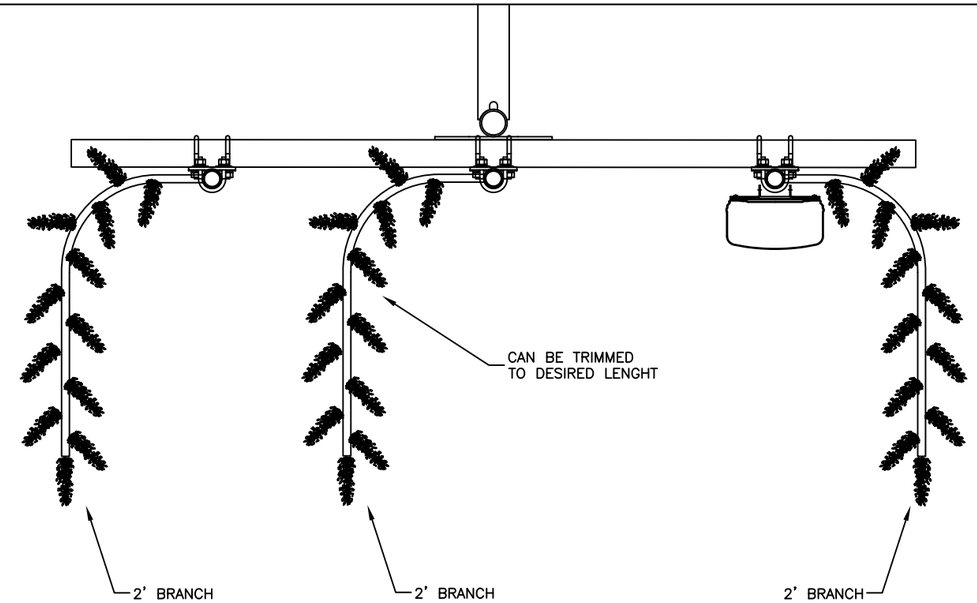

ENLARGE ANTENNA PLAN VIEW

SCALE: NONE | 2

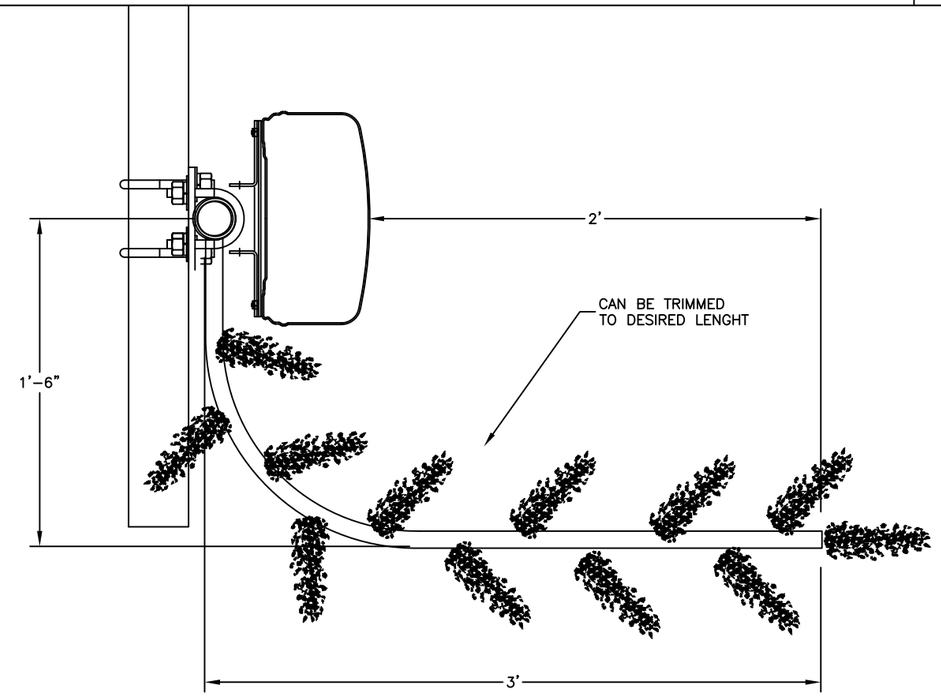

ENLARGE 2' ANTENNA BRANCH MOUNTING DETAIL VIEW

SCALE: NONE | 3

CONSULTANT

SOLAR COMMUNICATIONS INTERNATIONAL, INC.
8885 RIO SAN DIEGO DR.
Suite 207, San Diego, CA 92108
Tel: (619) 243-2750; Fax: (619) 243-2749
www.RFTransparent.com

COPYRIGHT 2006 SOLAR COMMUNICATIONS INTERNATIONAL, INC.
THESE MATERIALS ARE PROTECTED BY UNITED STATES COPYRIGHT LAW AND MAY NOT BE REPRODUCED, DISTRIBUTED, TRANSMITTED, DISPLAYED, OR PUBLISHED WITHOUT THE PRIOR WRITTEN PERMISSION OF SOLAR COMMUNICATIONS INTERNATIONAL, INC. YOU MAY NOT ALTER OR REMOVE ANY TRADEMARK, COPYRIGHT OR OTHER NOTICE FROM COPIES OF THIS CONTENT.

CLIENT

PROJECT
55' RFTRANSPARENT MONOPINE

LOCATION
ZOD ALLTEL CO06 GOLDEN CRY EXT.
#858480
MILLION DOLLAR HIGHWAY
RIDGWAY, CO 814323

ISSUED FOR
PRODUCTION

DW'N BY	CK'D BY	DATE
LEM	LEM	07SEP18

REVISIONS

REV.	CHANGES	DATE	BY
A	14' EXTENSION	29MAR19	LEM

ENGINEER SEAL

SHEET TITLE
PLAN & DETAIL VIEW

WSC PROJECT NUMBER

DRAWING NUMBER

PAGE NUMBER
RF-2

858480 ZOD ALLTEL CO06 GOLDEN CRY EXTENSION (EXISTING BRANCH LAYOUT)

SCI Branch Receptacle Fab Sheet - 07SEP2018

#	QTY	ELEV	1	2	3	4	5	6	7	8	9	10	11	12
Top Cap	4	30'-0"	[1] mount for 5' branch and [3] mounts for 4'-0" branches											
25	3	29'-7"		8'				8'				8'		
24	3	28'-8"	8'				8'				8'			
23	3	27'-9"			8'				8'				8'	
22	3	26'-10"				8'				8'				8'
Antennas		26'-0"	Tophat for [12] panel antennas with 26'-0" rad center with no branches											
21	3	25'-4"		8'				8'				8'		
20	3	24'-5"	8'				8'				8'			
19	3	23'-6"			8'				8'				8'	
18	3	22'-7"				8'				8'				8'
17	3	21'-8"		8'				8'				8'		
16	3	20'-9"	8'				8'				8'			
15	3	19'-10"			10'				10'				10'	
14	3	18'-11"				8'				8'				8'
13	3	18'-0"		10'				10'				10'		
12	3	16'-11"	8'				8'				8'			
11	3	15'-10"			10'				10'				10'	
10	3	14'-9"				8'				8'				8'
9	3	13'-8"		10'				10'				10'		
8	3	12'-7"	8'				8'				8'			
7	3	11'-6"			10'				10'				10'	
6	3	10'-5"				10'				10'				10'
5	3	9'-4"		10'				10'				10'		
4	3	8'-3"	8'				8'				8'			
3	3	7'-2"			10'				10'				10'	
2	3	6'-1"				10'				10'				10'
1	3	5'-0"		10'				10'				10'		

79 EXISTING RECEPTACLES

4'	3
5'	1
8'	48
10'	27
	79 EXISTING BRANCHES

858480 ZOD ALLTEL CO06 GOLDEN CRY EXTENSION (NEW BRANCH LAYOUT-REV-A)

SCI Branch Receptacle Fab Sheet - 29MAR2019

#	QTY	ELEV	1	2	3	4	5	6	7	8	9	10	11	12
Top Cap	4	40'-0"	[1] mount for 5' branch and [3] mounts for 6'-0" branches											
39	3	43'-6"			6'				6'				6'	
38	3	42'-6"				6'				6'				6'
37	3	41'-6"		6'				6'				6'		
36	3	40'-6"	6'				6'				6'			
2' Branches		46'-0"	Tophat for [9] panel antennas with 46'-0" rad center with [18] 2' branches											
35	3	39'-6"			8'				8'				8'	
34	3	38'-6"				6'				6'				6'
33	3	37'-6"		8'				8'				8'		
32	3	36'-6"	6'				6'				6'			
31	3	35'-6"			8'				8'				8'	
30	3	34'-6"				6'				6'				6'
29	3	33'-6"		8'				8'				8'		
28	3	32'-6"	8'				8'				8'			
27	3	31'-6"			8'				8'				8'	
26	3	30'-6"				8'				8'				8'
25	3	29'-7"		10'				10'				10'		
24	3	28'-8"	8'				8'				8'			
23	3	27'-9"			10'				10'				10'	
22	3	26'-10"				8'				8'				8'
Antennas		26'-0"	Tophat for [12] panel antennas with 26'-0" rad center with [24] 2' branches											
21	3	25'-4"		10'				10'				10'		
20	3	24'-5"	8'				8'				8'			
19	3	23'-6"			10'				10'				10'	
18	3	22'-7"				8'				8'				8'
17	3	21'-8"		10'				10'				10'		
16	3	20'-9"	8'				8'				8'			
15	3	19'-10"			10'				10'				10'	
14	3	18'-11"				8'				8'				8'
13	3	18'-0"		10'				10'				10'		
12	3	16'-11"	8'				8'				8'			
11	3	15'-10"			10'				10'				10'	
10	3	14'-9"				8'				8'				8'
9	3	13'-8"		10'				10'				10'		
8	3	12'-7"	8'				8'				8'			
7	3	11'-6"			10'				10'				10'	
6	3	10'-5"				10'				10'				10'
5	3	9'-4"		10'				10'				10'		
4	3	8'-3"	10'				10'				10'			
3	3	7'-2"			10'				10'				10'	
2	3	6'-1"				10'				10'				10'
1	3	5'-0"		10'				10'				10'		

EXTENSION

75 EXISTING RECEPTACLES

46 NEW EXTENSION RECEPTACLES

2'	42
5'	1
6'	24
8'	48
10'	48
	163 NEW BRANCHES

EXISTING BRANCH LAYOUT

SCALE: NONE | 1

NEW BRANCH LAYOUT

SCALE: NONE | 2

CONSULTANT

SOLAR COMMUNICATIONS INTERNATIONAL, INC.
8885 RIO SAN DIEGO DR.
Suite 207, San Diego, CA 92108
Tel: (619) 243-2750; Fax: (619) 243-2749
www.RFTransparent.com

COPYRIGHT 2006 SOLAR COMMUNICATIONS INTERNATIONAL, INC.
THESE MATERIALS ARE PROTECTED BY UNITED STATES COPYRIGHT LAW AND MAY NOT BE REPRODUCED, DISTRIBUTED, TRANSMITTED, DISPLAYED, OR PUBLISHED WITHOUT THE PRIOR WRITTEN PERMISSION OF SOLAR COMMUNICATIONS INTERNATIONAL, INC. YOU MAY NOT ALTER OR REMOVE ANY TRADEMARK, COPYRIGHT OR OTHER NOTICE FROM COPIES OF THIS CONTENT.

CLIENT

PROJECT
55' RFTRANSPARENT MONOPINE

LOCATION
ZOD ALLTEL CO06 GOLDEN CRY EXT.
#858480
MILLION DOLLAR HIGHWAY
RIDGWAY, CO 814323

ISSUED FOR
PRODUCTION

DW'N BY	CK'D BY	DATE
LEM	LEM	07SEP18

REVISIONS

REV.	CHANGES	DATE	BY
A	14' EXTENSION	29MAR19	LEM

ENGINEER SEAL

SHEET TITLE
BRANCH LAYOUT

WSC PROJECT NUMBER

DRAWING NUMBER

PAGE NUMBER
RF-3

JOB NO.: U1085-318-191

Copyright © 2019 Vector Structural Engineering, LLC

This Excel workbook contains proprietary information belonging to Vector Structural Engineering, LLC, and may be neither wholly nor partially copied or reproduced without the prior written permission of Vector Structural Engineering, LLC.

PROJECT: ZOD Alltel

Monopine Branch Layout

Eff. Area Factor:	0.90	
Top Crown Radius:	5	ft
C_A Factor:	0.6	
Bott. Branch Elev. (ft):	5	ft
Top of Steel Elev. (ft):	44	ft

Branch Layout Along Pole:

Branch Length (ft)	Qty	Elevation Start (ft)	Elevation Stop (ft)	Branch Wt. (lbs)	Total Wt. (lbs)	Wind Area Gross (ft^2)	Wind Area Eff. (ft^2)	Wind Area C_AA_E (ft^2)
6	11	40.3	44.0	39.6	435.6	49.6	44.6	26.7
6	10	37.0	40.3	39.6	396	45.1	40.6	24.3
8	24	29.0	37.0	50.6	1214.4	140.7	126.5	75.9
8	24	21.0	29.0	50.6	1214.4	141.1	126.8	76.1
10	24	13.0	21.0	66.0	1584	173.4	155.9	93.5
10	24	5.0	13.0	66.0	1584	173.8	156.2	93.7
				Total (lbs):	6428.4			

Antenna Branches:

Branch Length (ft)	Qty	Elev. (ft)	Weight
2	18	40	270
2	24	26	360

Top Crown:

Branch Length (ft)	Qty	Weight	Total Wt.
6	3	118.8	
5	1	35.2	154
Gross Area (ft2):	39.3		
Eff. Area (ft2):	35.3		
C_AA_E (ft^2):	21.2		

EPA VALUES

SCALE: NONE

1

CONSULTANT

SOLAR COMMUNICATIONS INTERNATIONAL, INC.
8885 RIO SAN DIEGO DR.
Suite 207, San Diego, CA 92108
Tel: (619) 243-2750; Fax: (619) 243-2749
www.RFTransparent.com

COPYRIGHT 2006 SOLAR COMMUNICATIONS INTERNATIONAL, INC. THESE MATERIALS ARE PROTECTED BY UNITED STATES COPYRIGHT LAW AND MAY NOT BE REPRODUCED, DISTRIBUTED, TRANSMITTED, DISPLAYED, OR PUBLISHED WITHOUT THE PRIOR WRITTEN PERMISSION OF SOLAR COMMUNICATIONS INTERNATIONAL, INC. YOU MAY NOT ALTER OR REMOVE ANY TRADEMARK, COPYRIGHT OR OTHER NOTICE FROM COPIES OF THIS CONTENT.

CLIENT

PROJECT
55' RFTRANSPARENT MONOPINE

LOCATION
ZOD ALLTEL CO06 GOLDEN CRY EXT.
#858480
MILLION DOLLAR HIGHWAY
RIDGWAY, CO 814323

ISSUED FOR
PRODUCTION

DW'N BY	CK'D BY	DATE
LEM	LEM	07SEP18

REVISIONS

REV.	CHANGES	DATE	BY
A	14' EXTENSION	29MAR19	LEM

ENGINEER SEAL

SHEET TITLE
EPA VALUES

WSC PROJECT NUMBER

DRAWING NUMBER

PAGE NUMBER
RF-4

Mono-pine Branch Photo by Iron Fly at Altitude, LLC

Pier Structural Engineering Corp.
55 Northfield Drive E, Suite 198
Waterloo, ON N2K 3T6
Tel: 519-885-3806
Fax: 519-884-3806
www.p-sec.ca

April 10, 2019

Lauren Brown, Tower Structural Analyst
Crown Castle
2055 S. Stearman Drive
Chandler, AZ 85286

Subject:	**Structural Modification Report**	
Carrier Designation:	Carrier Co-Locate:	**T-Mobile**
	Carrier Site Number:	**DN02489A**
	Carrier Site Name:	**N/A**
Crown Castle Designation:	Crown Castle BU Number:	**858480**
	Crown Castle Site Name:	**ZOD_ALLTEL_CO06_FAR_GOLDEN_CRY**
	Crown Castle JDE Job Number:	**563369**
	Crown Castle WO Number:	**1721616**
	Crown Castle Order Number:	**484122 Rev. 0**
Engineering Firm Designation:	P-SEC Project Number:	**19739**
Site Data:	**MILLION DOLLAR HIGHWAY, RIDGWAY, Ouray County, CO** **Latitude *38° 0' 54.3"*, Longitude *-107° 39' 58.9"*** **29-ft Monopole Tower + 14-ft Proposed Extension**	

Dear Lauren Brown,

Pier Structural Engineering Corp. (P-SEC) is pleased to submit this **"Structural Modification Report"** to determine the structural integrity of the above mentioned tower. This analysis has been performed in accordance with the Crown Castle Structural 'Statement of Work' and the terms of Crown Castle Purchase Order Number 1359517, in accordance with order 484122, revision 0.

The purpose of the analysis is to determine acceptability of the tower stress level including the proposed modifications as outlined in the attached drawings, "Appendix D". Based on our analysis we have determined the tower stress level for the structure and foundation, under the following load case, to be:

LC4: Modified Structure w/ Proposed Equipment Configuration **Sufficient Capacity**

This analysis utilizes an ultimate 3-second gust wind speed of 115 mph as required by the 2015 International Building Code. Applicable Standard references and design criteria are listed in Section 2 - Analysis Criteria.

All modifications and equipment proposed in this report shall be installed in accordance with the attached drawings for the determined available structural capacity to be effective.

We at P-SEC appreciate the opportunity of providing our continuing professional services to you and Crown Castle. If you have any questions or need further assistance on this or any other projects please give us a call.

Structural analysis prepared by: Jordan Ross, E.I.T.

Respectfully submitted by:

Shawn Hoffmeyer, P.E., P.Eng.
CO PE# 50467

tnxTower Report - version 8.0.5.0

COLORADO LICENSED
SHAWN HOFFMEYER
50467
PROFESSIONAL ENGINEER

04/10/19

Pier Structural Engineering Corp.
55 Northfield Drive E, Suite 198
Waterloo, ON N2K 3T6
Tel: 519-885-3806
Fax: 519-884-3806
www.p-sec.ca

April 10, 2019

Lauren Brown, Tower Structural Analyst
Crown Castle
2055 S. Stearman Drive
Chandler, AZ 85286

Subject:	**Structural Modification Report**	
Carrier Designation:	Carrier Co-Locate:	**T-Mobile**
	Carrier Site Number:	**DN02489A**
	Carrier Site Name:	**N/A**
Crown Castle Designation:	Crown Castle BU Number:	**858480**
	Crown Castle Site Name:	**ZOD_ALLTEL_CO06_FAR_GOLDEN_CRY**
	Crown Castle JDE Job Number:	**563369**
	Crown Castle WO Number:	**1721616**
	Crown Castle Order Number:	**484122 Rev. 0**
Engineering Firm Designation:	P-SEC Project Number:	**19739**
Site Data:	**MILLION DOLLAR HIGHWAY, RIDGWAY, Ouray County, CO** **Latitude *38° 0' 54.3"*, Longitude *-107° 39' 58.9"*** **29-ft Monopole Tower + 14-ft Proposed Extension**	

Dear Lauren Brown,

Pier Structural Engineering Corp. (P-SEC) is pleased to submit this **"Structural Modification Report"** to determine the structural integrity of the above mentioned tower. This analysis has been performed in accordance with the Crown Castle Structural 'Statement of Work' and the terms of Crown Castle Purchase Order Number 1359517, in accordance with order 484122, revision 0.

The purpose of the analysis is to determine acceptability of the tower stress level including the proposed modifications as outlined in the attached drawings, "Appendix D". Based on our analysis we have determined the tower stress level for the structure and foundation, under the following load case, to be:

LC4: Modified Structure w/ Proposed Equipment Configuration **Sufficient Capacity**

This analysis utilizes an ultimate 3-second gust wind speed of 115 mph as required by the 2015 International Building Code. Applicable Standard references and design criteria are listed in Section 2 - Analysis Criteria.

All modifications and equipment proposed in this report shall be installed in accordance with the attached drawings for the determined available structural capacity to be effective.

We at P-SEC appreciate the opportunity of providing our continuing professional services to you and Crown Castle. If you have any questions or need further assistance on this or any other projects please give us a call.

Structural analysis prepared by: Jordan Ross, E.I.T.

Respectfully submitted by:

Shawn Hoffmeyer, P.E., P.Eng.
CO PE# 50467

tnxTower Report - version 8.0.5.0

TABLE OF CONTENTS

1) INTRODUCTION

2) ANALYSIS CRITERIA
Table 1 - Proposed Equipment Configuration
Table 2 - Other Considered Equipment

3) ANALYSIS PROCEDURE
Table 3 - Documents Provided
3.1) Analysis Method
3.2) Assumptions

4) ANALYSIS RESULTS
Table 4 - Section Capacity (Summary)
Table 5 - Tower Component Stresses vs. Capacity
4.1) Recommendations

5) APPENDIX A
tnxTower Output

6) APPENDIX B
Base Level Drawing

7) APPENDIX C
Additional Calculations

8) APPENDIX D
Required Modification Drawings

1) INTRODUCTION

This tower is a 29-ft Monopole tower originally designed by SCI in December of 2015 for a wind speed of 90 mph per TIA-222-G. New branch design by SCI for the entire monopole including the extension was designed in March of 2019.

The modification drawings designed by P-SEC and attached in Appendix D have been considered in this analysis. This proposed 14-ft tower extension brings the total tower height to 43-ft.

2) ANALYSIS CRITERIA

The following design parameters have been used in our analysis:

Design Standard:		TIA-222-H Standard
County/State:		Ouray County, CO
Wind Speeds:	*CASE 1*	115 mph (3-second gust)
	CASE 2	60 mph (3-second gust) for serviceability
Exposure Category:		C
Topographic Category:		1
Risk Category:		II

Table 1 - Proposed Equipment Configuration

Mounting Level (ft)	Center Line Elevation (ft)	Number of Antennas	Antenna Manufacturer	Antenna Model	Number of Feed Lines	Feed Line Size (in)
40	40	1	andrew	VHLP3-11W	1 1	1-3/5 1/2
		3	commscope	FF-65C-R1		
		1	ceragon	FIBEAIR IP-20C		
		3	nokia	AHLOA		
		1	nokia	NSN COVP		
		3	perfect vision	PV-MPM-TA36-10-B Mount		

Table 2 - Other Considered Equipment

Mounting Level (ft)	Center Line Elevation (ft)	Number of Antennas	Antenna Manufacturer	Antenna Model	Number of Feed Lines	Feed Line Size (in)
26	26	3	kmw	ET-X-UW-70-16-70-18-iR-AT	6 3 3	3/4 3/8 5/16
		3	commscope	SBJAH4-1D65C-DL		
		3	kathrein	800 10866K		
		3	alcatel lucent	RRH2x60-850		
		3	raycap	DC6-48-60-18-8F		
		3	alcatel lucent	RRH4X25-WCS		
		3	alcatel lucent	B25 RRH4x30-4R		
		3	alcatel lucent	RRH40-850		
		3	alcatel lucent	RRH2X40-07-L		
		3	alcatel lucent	B66A RRH4X45		
		1	--	T-Arm Mount [TA 602-3]		
		1	--	Kicker Support [NA 509-3]		
17	17	1	andrew	VHLPX4-11	1	EWP63
		1	--	Pipe Mount [PM 601-1]		

3) ANALYSIS PROCEDURE

Table 3 - Documents Provided

Document	Remarks	Reference	Source
4-GEOTECHNICAL REPORTS	TEP, Proj. No. 55003.20051 dated 7/9/2014	5175352	CCISITES
4-TOWER FOUNDATION DRAWINGS/DESIGN/SPECS	SCI, Proj. No. U1085-410-151 dated 1/6/2016	6060200	CCISITES
4-TOWER MANUFACTURER DRAWINGS	SCI, Proj. No. U1085-410-151 dated 12/31/2015	6441374	CCISITES
4-TOWER REINFORCEMENT DESIGN/DRAWINGS/DATA	SCI, Branch Design dated 3/29/2019	7813791	CCISITES
APPLICATION	T-Mobile, Revision # 0 dated 3/13/2019	484122	CCISITES
4-TOWER REINFORCEMNT DESIGN/DRAWINGS/DATA	P-SEC	Appendix D	ON FILE

3.1) Analysis Method

tnxTower (8.0.5.0), a commercially available analysis software package, was used to create a three-dimensional model of the tower and calculate member stresses for various loading cases. Selected output from the analysis is included in Appendix A.

3.2) Assumptions

1) Tower and structures were built in accordance with the manufacturer's specifications.
2) The tower\structures have been maintained in accordance with the manufacturer's specification.
3) The configuration of antennas, transmission cables, mounts and other appurtenances are as specified in Tables 1 and 2 and the referenced drawings.
4) P-SEC did not analyze antenna supporting mounts as part of this analysis report and assumed they are structurally sufficient. It is the carrier's responsibility to ensure structural compliance of their existing and/or proposed antenna supporting mounts.
5) All equipment model numbers, quantities, and centerline elevations are as provided in the CCI CAD package dated 3/14/2019.

This analysis may be affected if any assumptions are not valid or have been made in error. P-SEC should be notified to determine the effect on the structural integrity of the tower.

4) ANALYSIS RESULTS

Table 4 - Section Capacity (Summary)

Section No.	Elevation (ft)	Component Type	Size	Critical Element	P (K)	SF*P_allow (K)	% Capacity	Pass / Fail
L1	43 - 29	Pole	TP18x18x0.375	1	-6	687	19.7	Pass
L2	29 - 0	Pole	TP24.09x18x0.3125	2	-18	1449	53.6	Pass
							Summary	
						Pole (L2)	53.6	Pass
						RATING =	**53.6**	**Pass**

Table 5 - Tower Component Stresses vs. Capacity

Notes	Component	Elevation (ft)	% Capacity	Pass / Fail
2	Anchor Rods	--	45.6	Pass
	Base Plate		45.4	Pass
2	Flange Bolts	29	54.0	Pass
	Top Flange Plate		33.8	Pass
	Bottom Flange Plate		46.9	Pass
2	Base Foundation - Soil Interaction	--	36.0	Pass
	Base Foundation - Structural		37.4	Pass

Structure Rating (max from all components) =	**54.0%**

Notes: 1) See full member breakdown and section capacities in Appendix A.
2) See additional documentation in Appendix C for supporting calculations.

4.1) Recommendations

Perform the modifications detailed in “Appendix D” to remedy the deficiencies identified in Crown Castle Work Order No. 1632860.

Should you have any questions, please call us anytime at 519-885-3806.

encl.
858480_484122 PASSING SA Report_20190410.doc

APPENDIX A

TNXTOWER OUTPUT

43.0 ft

Section	Length (ft)	Number of Sides	Thickness (in)	Top Dia (in)	Bot Dia (in)	Grade	Weight (K)
1	14.00	1	0.3750	18.0000	18.0000	A53-B-35	1.0
2	29.00	18	0.3125	18.0000	24.0900	A572-65	2.0

29.0 ft

0.0 ft

3.0

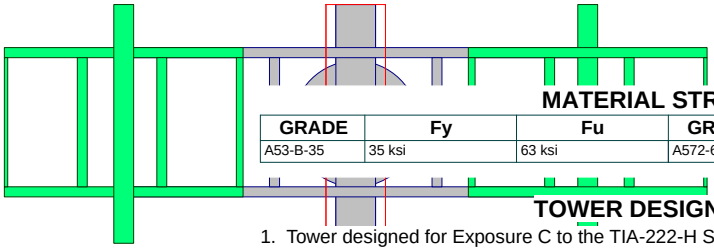

MATERIAL STRENGTH

GRADE	Fy	Fu	GRADE	Fy	Fu
A53-B-35	35 ksi	63 ksi	A572-65	65 ksi	80 ksi

TOWER DESIGN NOTES

1. Tower designed for Exposure C to the TIA-222-H Standard.
2. Tower designed for a 115 mph basic wind in accordance with the TIA-222-H Standard.
3. Deflections are based upon a 60 mph wind.
4. Tower Risk Category II.
5. Topographic Category 1 with Crest Height of 0.00 ft
6. TIA-222-H Annex S
7. -
8. E - Existing, P - Proposed, R - Reserved
9. Proposed loading at 40ft elevation
10. TOWER RATING: 53.6%

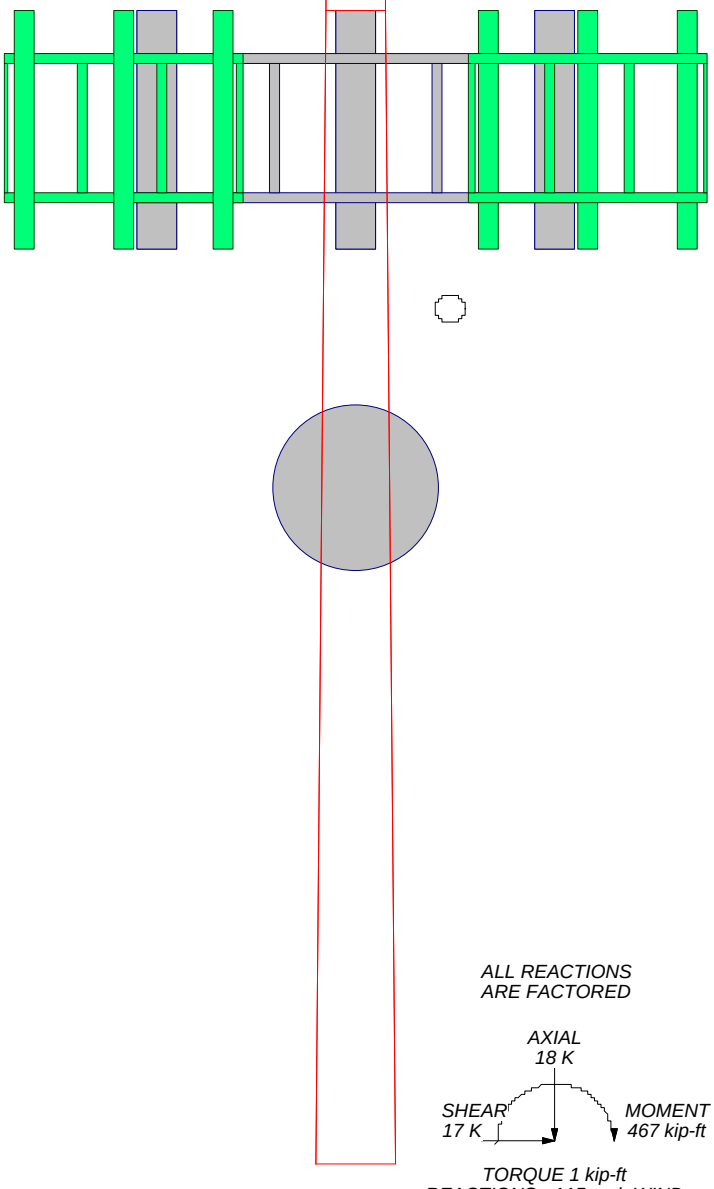

ALL REACTIONS ARE FACTORED

AXIAL 18 K

SHEAR 17 K

MOMENT 467 kip-ft

TORQUE 1 kip-ft

REACTIONS - 115 mph WIND

Pier Structural Engineering Corp
198-55 Northfield Drive East
Waterloo, ON N2K 3T6
Phone: (519) 885-3806
FAX: (519) 884-3806

Job:	**PSEC 19739 (for UPGRADE DRAWINGS)**		
Project:	**BU 858480 - ZOD_ALLTEL_CO06_FAR_GOLDEN_CRY (for T-MOBIL**		
Client: CROWN CASTLE	Drawn by: jross	App'd:	
Code: TIA-222-H	Date: 04/08/19	Scale: NTS	
Path: C:\Users\jross\Desktop\19739\PASSING SA\858480_LC4_20190408.eri		Dwg No. E-1	

Before the
Federal Communications Commission
Washington, D.C. 20554

In the Matter of	)	
	)	
Implementation of State and Local Governments' Obligation to Approve Certain Wireless Facility Modification Requests Under Section 6409(a) of the Spectrum Act of 2012	)	WT Docket No. 19-250
	)	
	)	RM-11849
	)	

DECLARATORY RULING AND NOTICE OF PROPOSED RULEMAKING

Adopted: June 9, 2020 **Released: June 10, 2020**

Comment Date: 20 days after publication in the Federal Register
Reply Date: 30 days after publication in the Federal Register

By the Commission: Chairman Pai and Commissioners O'Rielly and Carr issuing separate statements; Commissioners Rosenworcel and Starks dissenting and issuing separate statements.

TABLE OF CONTENTS

Heading Paragraph #

I. INTRODUCTION 1
II. BACKGROUND 6
III. DECLARATORY RULING 11
A. Commencement of Shot Clock 14
B. Height Increase for Towers Outside the Public Rights-of-Way 24
C. Equipment Cabinets 29
D. Concealment Elements 32
E. Conditions Associated with the Siting Approval 41
F. Environmental Assessments After Execution of Memorandum of Agreement 45
IV. NOTICE OF PROPOSED RULEMAKING 51
V. PROCEDURAL MATTERS 57
VI. ORDERING CLAUSES 63
Appendix A—Comments and Reply Comments
Appendix B—Initial Regulatory Flexibility Analysis

I. INTRODUCTION

1. Today, we continue our efforts to facilitate the deployment of 5G networks—and the economic opportunity that they enable—in every community. To reach all corners of our nation, 5G networks must use a range of spectrum bands, from low to high frequencies, and a variety of physical infrastructure, from small cells to macro towers. To meet these needs, the Commission's spectrum policy

has focused on making available a wide range of low-, mid-, and high-band spectrum.[1] Similarly, the Commission's infrastructure policy has focused on updating our regulations to reflect new technology like small cells. Most notably, the Commission has modernized its approach to federal historic preservation and environmental review governing wireless infrastructure to accommodate small cell technology[2] and has addressed outlier conduct at the State and local government level that needlessly slowed down and increased the costs of deploying new small cells and modified wireless facilities.[3] We have seen a significant acceleration of wireless builds in the wake of those decisions. At the same time, there remain additional barriers to wireless infrastructure deployment that merit our consideration.

2. These barriers affect not just small cell deployment. Indeed, we know that providers of 5G networks will not reach all Americans solely by deploying small cell technology. We therefore also must focus on ensuring that our infrastructure regulations governing macro towers align with the critical need to upgrade existing sites for 5G networks, particularly in rural areas, where small cell deployment may be less concentrated.[4] As the record in this proceeding shows, ongoing uncertainty regarding the application of existing federal law to aspects of State and local government review of modifications to

[1] *Review of the Commission's Rules Governing the 896-901/935-940 MHz Band*, WT Docket No. 17-200, Report and Order, Order of Proposed Modification, and Orders, FCC 20-67 (May 14, 2020); *Transforming the 2.5 GHz Band*, WT Docket No. 18-120, Report and Order, 34 FCC Rcd 5446 (2019); *Auction of Priority Access Licenses for the 3550-3650 MHz Band, Comment Sought on Competitive Bidding Procedures for Auction 105*, AU Docket No. 19-244, Public Notice, 34 FCC Rcd 9215 (OEA/AU 2019); *Expanding Flexible Use of the 3.7 to 4.2 GHz Band*, GN Docket No. 18-122, Report and Order and Order of Proposed Modification, 35 FCC Rcd 2343 (2020); *Wireless Telecommunications Bureau Announces that Applications for Auction 103 Licenses are Accepted for Filing*, Public Notice, DA 20-461, 2020 WL 2097298 (WTB Apr. 30, 2020).

[2] *See, e.g.*, *Accelerating Wireless Broadband Deployment by Removing Barriers to Infrastructure Investment*, WT Docket No. 17-79, Second Report and Order, 33 FCC Rcd 3102 (2018) (*2018 NEPA/NHPA Order*) (streamlining environmental and historic preservation review procedures and clarifying cases in which fees are required for Tribal review), *aff'd in part, rev'd in part*, *United Keetoowah Band of Cherokee Indians, v. FCC*, 933 F.3d 728 (D.C. Cir. 2019) (affirming the FCC's changes in the *2018 NEPA/NHPA Order* to tribal involvement in Section 106 review and denying request to vacate the *Order* in its entirety while granting petitioners' request to vacate the portion of the decision that exempted small cells from review under the National Environmental Policy Act and the National Historic Preservation Act).

[3] *See, e.g.*, *Accelerating Wireless Broadband Deployment by Removing Barriers to Infrastructure Investment*, WT Docket No. 17-79, WC Docket No. 17-84, Declaratory Ruling and Third Report & Order, 33 FCC Rcd 9088, 9096-100, paras. 23-28, 32 (2018) (*2018 Small Cell Order*) (clarifying state and local legal requirements that may have the effect of prohibiting service under 47 U.S.C. §§ 253, 332(c)(7)), pets. for review pending, *Sprint Corp. v. FCC*, *et al.* (9th Cir).

[4] Certain residents and representatives of rural areas have expressed support in the record for our efforts to accelerate deployment of wireless infrastructure. *See, e.g.*, Letter from Denis Pitman, Chairman, Donald W. Jones, Member, and John Ostlund, Member, Board of County Commissioners for Yellowstone County, MT, to Marlene H. Dortch, Secretary, FCC, WT Docket No. 19-250 and RM-11849 (filed May 28, 2020); Letter from Travis W. Jones, Chief, Broadview Rural Fire District, to Marlene H. Dortch, Secretary, FCC, WT Docket No. 19-250 and RM-11849 (filed June 1, 2020); Letter from John Prinkki to Marlene H. Dortch, Secretary, FCC, WT Docket No. 19-250 and RM-11849 (filed June 2, 2020); Letter from Paul Anderes, Commissioner, Union County, OR, to Marlene H. Dortch, Secretary, FCC, WT Docket No. 19-250 and RM-11849 (filed May 27, 2020); Letter from Michelle Erickson-Jones to Marlene H. Dortch, Secretary, FCC, WT Docket No. 19-250 and RM-11849 (filed June 1, 2020); Letter from Clinton Loss, President, Montana Emergency Medical Services Association, to Marlene H. Dortch, Secretary, FCC, WT Docket No. 19-250 and RM-11849 (filed June 4, 2020); Letter from Marian J. Orr, Mayor, City of Cheyenne, WY, to Marlene H. Dortch, Secretary, FCC, WT Docket No. 19-250 and RM 11849 (filed Apr. 23, 2020); Rocky Mountain Farmers Union (@RMFUnion), Twitter (May 19, 2020, 8:13 PM), https://twitter.com/RMFUnion/status/1262899253229256705; Billings, MT Chamber of Commerce (@ChamberBillings), Twitter (May 19, 2020, 7:16 PM), https://twitter.com/ChamberBillings/status/1262884844129812483.

existing wireless equipment remains a deterrent to the rapid deployment of 5G wireless infrastructure. We are committed to working with State and local governments to facilitate the deployment of advanced wireless networks in all communities consistent with the decisions already made by Congress, which we expect will usher in a new era of American entrepreneurship, productivity, economic opportunity, and innovation for years to come.

3. Therefore, in this *Declaratory Ruling and Notice of Proposed Rulemaking*, we clarify the meaning of our rules implementing Congress' decisions in section 6409(a) of the Spectrum Act of 2012,[5] which recognized the efficiency of using existing infrastructure for the expansion of advanced wireless networks. Those rules set forth a streamlined process for State and local government review of applications to deploy wireless telecommunications equipment on existing infrastructure.[6] Under this framework, a State or local government shall approve within 60 days any request for modification of an existing wireless tower or base station that does not substantially change the physical dimensions of such tower or base station.[7]

4. Our clarifications are necessary to ensure fidelity to the language of those rules and the decisions Congress made in section 6409(a) that "a State or local government may not deny, and shall approve, any eligible facilities request for a modification of an existing wireless tower or base station that does not substantially change the physical dimensions of such tower or base station."[8] Specifically, our *Declaratory Ruling* clarifies our rules regarding when the 60-day shot clock for State or local government review of modifications of existing structures commences.[9] We also clarify what constitutes a "substantial change" in the physical dimensions of wireless infrastructure under our rules, and the extent to which certain elements of a proposed modification to existing infrastructure affect the eligibility of that proposed modification for streamlined State or local government review under section 6409(a).[10] Finally, we further streamline our historic preservation and environmental review process to eliminate a redundant and unnecessary element by clarifying that when the FCC and applicants have entered into a memorandum of agreement to mitigate effects on historic properties a subsequent environmental assessment addressing such effects is not required.[11]

5. In the *Notice of Proposed Rulemaking*, we seek comment on whether changes to our rules regarding excavation outside the boundaries of an existing tower site, including the definition of the boundaries of a tower "site," would advance the objectives of section 6409(a).[12]

---

[5] Middle Class Tax Relief and Job Creation Act of 2012, Pub. L. No. 112-96, title VI (Spectrum Act of 2012), § 6409(a), 126 Stat. 156 (Feb. 22, 2012) (codified as 47 U.S.C. § 1455(a)).

[6] *See* 47 U.S.C. § 1455(a); 47 CFR § 1.6100; *Acceleration of Broadband Deployment by Improving Wireless Facilities Siting Policies*, WT Docket No. 13-238 and 13-32, WC Docket No. 11-59, Report and Order, 29 FCC Rcd 12865, 12922-66, paras. 135-241 (2014) (*2014 Infrastructure Order*), *aff'd*, *Montgomery Cty. v. FCC*, 811 F.3d 121 (4th Cir. 2015).

[7] 47 U.S.C. § 1455(a)(1); *see* 47 CFR § 1.6100 (b)(7), (c); *2014 Infrastructure Order*, 29 FCC Rcd at 12940-58, paras. 182-204, 205-21.

[8] 47 U.S.C. § 1455(a)(1).

[9] 47 CFR § 1.6100(c)(2)-(4); *2014 Infrastructure Order*, 29 FCC Rcd at 12955-58, paras. 211-221.

[10] 47 CFR § 1.6100(b)(7)(i), (iii), (v), (vi); *2014 Infrastructure Order*, 29 FCC Rcd at 12944-47, 12949-51, paras. 188-94, 200, 204.

[11] *See* 47 CFR §§ 1.1307(a), 1.1308, 1.1311; *Nationwide Programmatic Agreement for Review of Effects on Historic Properties for Certain Undertakings Approved by the Federal Communications Commission* (Wireless Facilities Nationwide Programmatic Agreement), 47 CFR pt. 1, Appx. C.

[12] 47 CFR § 1.6100(b)(7)(iv); 47 CFR § 1.6100(b)(6).

II. BACKGROUND

6. Under Section 6409(a) of the Spectrum Act, Congress determined that "a State or local government may not deny, and shall approve, any eligible facilities request for a modification of an existing wireless tower or base station that does not substantially change the physical dimensions of such tower or base station."[13] Congress intended this provision of the Spectrum Act to advance wireless service by expediting the deployment of the network facilities needed to provide wireless services.[14]

7. In 2014, the Commission adopted the *2014 Infrastructure Order*, which, among other things, codified rules to implement section 6409(a).[15] Commission rules provide that a State or local government must approve an eligible facilities request within 60 days of the date on which an applicant submits the request.[16] The Commission defined the term "eligible facilities request" as "[a]ny request for modification of an existing tower or base station that does not substantially change the physical dimensions of such tower or base station, involving: (i) Collocation of new transmission equipment; (ii) Removal of transmission equipment; or (iii) Replacement of transmission equipment."[17] The Commission's rules provide that changes are "substantial" if they: exceed defined limits on increases in the height or girth of the structure or the number of associated equipment cabinets, involve excavation or deployment on ground outside a structure's current site, defeat the concealment elements of the preexisting structure, or violate conditions previously imposed by the local zoning authority.[18] The Commission also established procedures for when the 60-day shot clock for review may be tolled, as well as a "deemed granted" remedy in the event that states and localities fail to act on an eligible facilities request within the 60-day window.[19] In recent years, the Commission has taken additional actions to streamline review by State and local governments of wireless infrastructure.[20]

8. In August and September of 2019, WIA and CTIA filed separate Petitions for Declaratory Ruling asking, among other things, for the Commission to make certain clarifications to streamline the section 6409(a) process,[21] and WIA filed a Petition for Rulemaking seeking changes to

---

[13] 47 U.S.C. § 1455(a).

[14] *See* H.R. Rep. No. 112-399, at 136 (2012). A section-by-section analysis of the JOBS Act, a precursor to the Spectrum Act of 2012, was submitted in the Congressional Record during floor debate of the Middle Class Tax Relief and Job Creation Act of 2012. The analysis explains that the precursor section to section 6409(a) was intended to "streamline[] the process for siting of wireless facilities by preempting the ability of State and local authorities to delay collocation of, removal of, and replacement of wireless transmission equipment." 157 Cong. Rec. 2055 (2012) (statement of Rep. Fred Upton).

[15] 47 CFR § 1.6100; *2014 Infrastructure Order,* 29 FCC Rcd at 12922-65, paras. 135-241.

[16] 47 CFR § 1.6100(c); *2014 Infrastructure Order*, 29 FCC Rcd at 12952, 12955-57, paras. 206, 211, 212, 215.

[17] 47 CFR § 1.6100(b)(3). The statutory definition of "eligible facilities request" is slightly different. *See* 47 U.S.C. § 1455(a). Our use of the term eligible facilities request in this order relies on the definition set forth in the rule. *See also 2014 Infrastructure Order*, 29 FCC Rcd at 12944-45, 12955, paras. 188, 211.

[18] 47 CFR § 1.6100(b)(7)(i)-(vi).

[19] *Id.* § 1.6100(c)(2)-(4).

[20] *See 2018 Small Cell Order*, 33 FCC Rcd at 9096-100, paras. 23-28, 32; *Accelerating Wireline Broadband Deployment by Removing Barriers to Infrastructure Investment*, WT Docket No. 17-79, WC Docket No. 17-84, Third Report & Order and Declaratory Ruling, 33 FCC Rcd 7705, 7775, 7777-79, paras. 140, 145-46 (2018) (*2018 Moratorium Order*) pets. for review pending, *American Elec. Power v. FCC*, et al. (9th Cir.).

[21] Petition of Wireless Infrastructure Association for Declaratory Ruling, WT Docket No. 19-250, at 2-4 (filed Aug. 27, 2019), https://ecfsapi.fcc.gov/file/109180312204232/19-250%20WIA%20Ex%20Parte%20(9-18-19).pdf (WIA Petition for Decl. Ruling); Petition of CTIA for Declaratory Ruling, WT Docket No. 19-250, WC Docket No. 17-84 at 2 (filed Sept. 6, 2019), https://ecfsapi.fcc.gov/file/1091954184161/190906%20CTIA%20Infrastructure%20PDR%20Final.pdf (CTIA

(continued….)

section 1.6100 of the Commission's rules.[22] The petitioners and individual wireless service providers assert that localities are misinterpreting the requirements of section 6409(a) and our implementing rules.[23] They contend that these misinterpretations are delaying 5G deployment and other needed infrastructure upgrades, and they urge us to clarify aspects of the Commission's rules implementing section 6409(a).[24]

9. Specifically, WIA's Petition for Declaratory Ruling asks the Commission to clarify: (1) when the section 6409(a) shot clock begins to run; and (2) whether the shot clock and "deemed granted remedy" apply to all authorizations necessary to deploy wireless infrastructure.[25] It also asks the Commission to clarify: (1) the definitions of "concealment elements," "equipment cabinets," and "current site;" (2) when a change to the size or height of an antenna is a "substantial change; (3) the interpretation of the separation clause in section 1.6100(b)(7)(i); (4) what are the "conditions associated with the siting approval" under section 1.6100(b)(7)(vi); and (5) that legal, non-conforming structures do not *per se* constitute substantial changes.[26] Additionally, WIA asks the Commission to clarify that localities may not issue conditional approvals under section 6409(a), nor may they needlessly impose processes to delay section 6409(a) approval.[27] CTIA's Petition requests clarification of the terms "concealment elements," "equipment cabinets," and "base station," under section 1.6100(b)(7), and it asks the Commission to find that applicants may lawfully construct facilities or make modifications if a locality has not issued all permits within the 60-day section 6409(a) shot clock and an application is deemed granted.[28]

(Continued from previous page)
Petition for Decl. Ruling). Although WIA and CTIA filed their Petitions for Declaratory Ruling in WT Docket No. 17-79, that proceeding does not address issues arising under section 6409(a) of the Spectrum Act. Rather, that proceeding focuses on wireless infrastructure deployment issues under sections 253 and 332(c)(7) of the Communications Act, the National Environmental Policy Act, and the National Historic Preservation Act. Thus, the Public Notice opening this proceeding directed parties to use new WT Docket No. 19-250 for filings addressing the section 6409(a) issues raised in WIA's and CTIA's petitions. *See Wireless Telecommunications Bureau and Wireline Competition Bureau Seek Comment on WIA Petition For Rulemaking, WIA Petition For Declaratory Ruling and CTIA Petition For Declaratory Ruling*, WT Docket No. 19-250, Public Notice, 34 FCC Rcd 8099, 8099 & n.4 (WTB/WCB 2019) (*WIA/CTIA Petitions Public Notice*).

[22] Petition of Wireless Infrastructure Association for Rulemaking, File No. RM-11849, https://ecfsapi.fcc.gov/file/108273047516225/WIA%20Petition%20for%20Rulemaking%20(8-27-19).pdf, (filed Aug. 27, 2019) (WIA Petition for Rulemaking). WIA's Petition for Rulemaking asks the FCC to amend section 1.6100 of the rules to determine that a compound expansion (i.e., excavation outside the current boundaries of leased or owned properties surrounding a tower site) is a "substantial change" under section 6409(a) only if excavation occurs more than 30 feet from a tower site boundary. The Petition for Rulemaking also asks the FCC to adopt rules requiring that (1) any fees charged for processing eligible facilities requests represent no more than a reasonable approximation of actual and direct costs incurred; and (2) an applicant's failure to pay disputed fees is not a valid basis for denial or refusal to process an eligible facilities request. WIA Petition for Rulemaking at 9-13.

[23] *See, e.g.*, WIA Petition for Decl. Ruling at 2; CTIA Petition for Decl. Ruling, at 3-4, 7-9; AT&T Comments at 2, 5; Competitive Carriers Association (CCA) Comments at 2; Crown Castle Comments at 4-6; CTIA Comments at 2-3, 6; CTIA Reply at 5-6; Extenet Comments at 21; Free State Comments at 2; T-Mobile Comments at 3, 6-7; WIA Comments at 3.

[24] WIA Petition for Decl. Ruling at 5-7; CTIA Petition for Decl. Ruling at 4-5. *See, e.g.*, CTIA Petition for Decl. Ruling at i-ii ("While the Commission's rules implementing Sections 6409 and 224 have played a vital role in promoting wireless infrastructure deployment, experience with these rules in the years since their adoption has identified areas of uncertainty and inconsistent application that slow down deployment and undermine Congressional and Commission intent.").

[25] WIA Petition for Decl. Ruling at 5-8.

[26] *Id.* at 9-10, 13, 16-20.

[27] *Id.* at 20, 21.

[28] CTIA Petition for Decl. Ruling at 9-16. CTIA also asks the Commission to clarify provisions of section 224 of the Communications Act related to accessing light poles, accessing space on poles, and pole attachment agreements.
(continued….)

10. Local governments allege that the current rules and processes are working well and that they are making efforts to comply with section 6409(a) and to process applications expeditiously.[29] They maintain that they have no interest in thwarting wireless network upgrades or delaying the deployment of appropriate facilities. They further claim that, to the extent their reviews are delayed at all, most of the delays are caused by applicants' errors[30] or their contractors' delays,[31] rather than by any improper local government review practices. They contend that the industry parties' arguments and proposals are premised on vague, unsubstantiated, and often false allegations that fail to identify specific localities or provide sufficiently concrete descriptions of their alleged violations.[32]

III. DECLARATORY RULING

11. In this *Declaratory Ruling*, we clarify several key elements that determine whether a modification request qualifies as an eligible facilities request that a State or local government must approve within 60 days, and we clarify when the 60-day shot clock for review of an eligible facilities request commences. These interpretations provide greater certainty to applicants for State and local government approval of wireless facility modifications, as well as to the reviewing government agencies,[33] and these interpretations should accelerate the deployment of advanced wireless networks.[34]

(Continued from previous page)
CTIA Petition for Decl. Ruling at 20-28. The portion of CTIA's Petition for Declaratory Ruling concerning pole attachments under section 224 of the Communications Act is being considered in WC Docket No. 17-84 and is not a subject of this *Declaratory Ruling*.

[29] *See, e.g.*, City of Huntington Beach Comments at 1; NATOA Comments at 7; NATOA Reply at 3; City of Newport News Comments at 2; New York City Comments at 2; National League of Cities (NLC) Comments at 7; NLC Reply at 6-7; San Francisco Reply at 2-3; Seattle Comments at 1.

[30] *See, e.g.*, San Diego Comments at 4-5 (summarizing survey finding that more than 70% of eligible facilities requests processed by 8 jurisdictions since 2014 required at least two incomplete notices before the applicant provided all needed information, adding an average of 29 days to the process; about 20% required a third notice, adding an average of 31 days; and 5% required a fourth notice, adding an average of 40 days); *id.* at 10-11 (examples of applicant misconduct include a provider's leaving small cell applications on the counter at town hall and later sending a letter asserting that the shot clock had commenced). The City of San Diego filed comments and reply comments jointly with 33 other municipal and county governments, referring to themselves collectively as the "Western Communities Coalition." For purposes of simplicity and easy identification, we refer to this group of commenters as "San Diego" throughout. *See also* NLC Comments at 27 (stating that Montgomery County, MD completes section 6409(a) review, on average, within 60 days, but about 24 of those days are spent waiting for applicants to correct errors, and more than half of eligible facilities requests require at least one request for submission of missing information).

[31] NLC Comments at 4-5 (asserting that from January through October 2019, the City of Portland, Oregon received 82 small wireless facilities permit applications, including 72 subject to section 6409(a), and that 17 of the 50 applications that the city had finished reviewing were not picked up by a contractor for a least a month after the city approved them); San Diego Comments at 5 (reporting that, based on the 650 eligible facilities requests that the City of San Diego reviewed pursuant to section 6409(a), applicants' contractors picked up building permits about 129 days after the city issued them, on average—approximately three times the length of time that the city took to process and approve them). *See also* Seattle Comments at 4-6 (asking the Commission to examine the problematic practices and processes employed by wireless companies and their contractors).

[32] *See, e.g.*, San Diego Comments at 1-3, 9; NLC Comments at 2-3; NLC Reply at 2-3 (industry parties fail to respond to documented information submitted by localities).

[33] We expect that the industry will work cooperatively with localities who wish to further streamline or adjust their policies to comport with our clarifications to the Commission's rules. *See, e.g.*, Letter from Nancy Werner, General Counsel, NATOA et al., to Marlene H. Dortch, Secretary, FCC, WT Docket No. 19-250 and RM-11849, at 2 (filed May 22, 2020) (NATOA May 22, 2020 *Ex Parte* Letter) (asking the Commission to delay consideration of the item to later in the year and stating that the *Declaratory Ruling* would "dramatically impact the way that local governments across the nation manage their eligible facilities request applications"); Letter from Robert C. May, Michael D. Johnston, Dr. Jonathan L. Kramer, Counsel for Beaverton, Oregon et al., Telecom Law Firm PC, and

(continued….)

12. Specifically, we clarify that:

- The 60-day shot clock in section 1.6100(c)(2) begins to run when an applicant takes the first procedural step in a locality's application process and submits written documentation showing that a proposed modification is an eligible facilities request;
- The phrase "with separation from the nearest existing antenna not to exceed twenty feet"

(Continued from previous page)
Kenneth Fellman, Gabrielle A. Daley, Counsel for Boulder, CO et al., Kissinger & Fellman, P.C., to Marlene H. Dortch, Secretary, FCC, WT Docket No. 19-250 and RM-11849, at 2 (filed June 2, 2020) (asking the Commission to delay consideration of the current item and explaining that localities would need to adapt local practices, policies, and regulations to implement to adjust to the Commission's actions); Letter from Stephen Isler, Mayor, Town of Berwyn Heights, MD, to Marlene H. Dortch, Secretary, FCC, WT Docket No. 19-250 and RM-11849, at 1 (filed June 2, 2020) (stating that a delay in adopting the *Declaratory Ruling* will "prevent the unnecessary diversion of scarce resources to adapt to the Commission's new rule clarifications").

[34] *See* Letter from John A. Howes, Jr., Government Affairs Counsel, WIA, to Marlene H. Dortch, Secretary, FCC, WT Docket No. 19-250 and RM-11849, at 3 (filed June 1, 2020) (WIA June 2020 *Ex Parte* Letter) (noting importance of Commission action "because, now more than ever, Americans are demanding better coverage and using more bandwidth. Over the past few months, network usage has surged as most Americans have been confined to their homes during the COVID-19 coronavirus pandemic."); Letter from Sarah K. Leggin, Director, Regulatory Affairs, CTIA, to Marlene H. Dortch, Secretary, FCC, WT Docket No. 19-250 and RM-11849, at 2 (filed June 1, 2020) (CTIA June 2020 *Ex Parte* Letter) (explaining that the Commission's clarifications "will have a meaningful impact on the speed of deployment and the ability of localities, states, and industry to work together in a cooperative manner"); Letter from Steven O. Vondran, Executive Vice President and President, U.S. Tower, American Tower, to Marlene H. Dortch, Secretary, FCC, WT Docket No. 19-250 and RM-11849, at 1-2 (filed May 19, 2020) (noting that the Commission's clarifications "will help speed the deployment of advanced wireless communication technologies throughout America at a time when American families are relying on wireless networks more than ever" during "the COVID-19 pandemic."). In light of these significant benefits to wireless infrastructure deployment, we decline to delay these clarifications. *See, e.g.*, NATOA May 22, 2020 *Ex Parte* Letter; Letter from Kit Kuhn, Mayor, City of Gig Harbor, WA, to Marlene H. Dortch, Secretary, FCC, WT Docket No. 19-250 and RM-11849, at 1 (filed June 1, 2020). WIA's and CTIA's petitions seeking clarifications of the section 6409(a) rules have been pending for more than nine months. The petitions were filed in August and September of 2019; WTB sought comment on the petitions on September 13, 2019. *WIA/CTIA Petitions Public Notice*, 34 FCC Rcd 8099; Federal Communications Commission, Comment Sought on WIA Petitions for Declaratory Ruling and Rulemaking and CTIA Petition for Declaratory Ruling, Advance Notice of Proposed Rulemaking, 84 Fed. Reg. 50810 (Sept. 26, 2019). Over 70 localities, states, or organizations representing their interests have filed more than 650 pages of comments or letters. *See* WT Docket No. 19-250. The Declaratory Ruling addresses long-standing issues that have frustrated wireless deployments for years, and commenters in this proceeding have previously filed in this and other dockets about the issues addressed in this Declaratory Ruling. *See, e.g.,* San Diego Comments at 41-44 (raising concerns that granting petitioners' request could allow an unlimited number of equipment cabinets to be added to a structure); NLC Comments at 25-30 (arguing that no changes should be made to the 6409(a) shot clock rules and discussing petitioners request that a "good faith effort" should start the 60-day shot clock); NLC Comments at 18 (arguing that concealment elements should not be only those identified as such at the time of approval); San Diego Comments at 37-39 (arguing against "retroactive limitations on concealment" and in favor of "local authority to continue to regulate aesthetics of deployment"); NLC Comments at 16-18 (arguing against a "narrow" definition of "concealment"); San Diego Comments at 30-36 (same); San Diego Comments at 47-48 (arguing that petitioners' requested changes would not solve the ambiguity regarding allowable height increases); NLC Comment at 2 (stating that the petitioners' seek rule changes, not mere clarifications). *See also* Letter from Stephen Traylor, Executive Director, NATOA, to Marlene H. Dortch, Secretary, FCC, WT Docket No. 17-79, Attach. at 13-15 (filed June 15, 2017) (attaching a 2014 filing discussing section 6409(a) that argued for giving localities authority to impose more conditions on wireless infrastructure and arguing against changes to the shot clock rules); Bellevue, Bothell, Burien, Ellensburg, Gig Harbor, Kirkland, Mountlake Terrace, Mukilteo, Normandy Park, Puyallup, Redmond and Walla Walla, WA Comments, WT Docket No. 17-79 (June 14, 2017) (describing ambiguity regarding concealment in the context of small cells and section 6409(a) and asking "that the Commission explicitly acknowledge that a small cell facility by very definition is a concealment element under 6409(a) regulations.").

in section 1.6100(b)(7)(i) allows an increase in the height of the tower of up to twenty (20) feet between antennas, as measured from the top of an existing antenna to the bottom of a proposed new antenna on the top of a tower;

- The term "equipment cabinets" in section 1.6100(b)(7)(iii) does not include relatively small electronic components, such as remote radio units, radio transceivers, amplifiers, or other devices mounted on the structure, and up to four such cabinets may be added to an existing facility per separate eligible facilities request;
- The term "concealment element" in section 1.6100(b)(7)(v) means an element that is part of a stealth-designed facility intended to make a structure look like something other than a wireless facility, and that was part of a prior approval;
- To "defeat" a concealment element under section 1.6100(b)(7)(v), a proposed modification must cause a reasonable person to view a structure's intended stealth design as no longer effective; and
- The phrase "conditions associated with the siting approval" may include aesthetic conditions to minimize the visual impact of a wireless facility as long as the condition does not prevent modifications explicitly allowed under section 1.6100(b)(7)(i)-(iv) (antenna height, antenna width, equipment cabinets, and excavations or deployments outside the current site) and so long as there is express evidence that at the time of approval the locality required the feature and conditioned approval upon its continuing existence.

13. Certain parties contend that we lack legal authority to adopt the rulings requested in the petitions, which they contend do not just clarify or interpret the rules established in 2014 but also change them, requiring that we issue a Notice of Proposed Rulemaking followed by a Report and Order.[35] As an initial matter, we note that we are not adopting all of the rulings requested in WIA's and CTIA's petitions for declaratory ruling because we find incremental action to be an appropriate step at this juncture, particularly given, as mentioned above, that the Commission has continued to take steps to ease barriers to deployment of wireless infrastructure since adopting rules to implement section 6409(a).[36] Our determinations in this *Declaratory Ruling* are intended solely to interpret and clarify the meaning and scope of the existing rules set forth in the *2014 Infrastructure Order*, in order to remove uncertainty and in light of the differing positions of the parties on these questions.[37] In addition, we find it appropriate to initiate a *Notice of Proposed Rulemaking* regarding tower site boundaries and excavation or deployment outside the boundaries of an existing tower site, in order to consider whether modifications of our rules are needed to resolve current disputes. We intend, with these steps, to continue to advance the same goals that led the Commission to adopt regulations implementing section 6409(a) in the first instance—to avoid

[35] *See, e.g.*, NLC Comments at ii, 2 (stating that the interpretations requested by WIA and CTIA "are not 'clarifications' – these are, in fact, substantial changes to the Section 6409(a) regime, and inconsistent with . . . the Commission's prior rulings" – and consequently, the Commission "cannot proceed purely on the basis of these petitions [by Declaratory Ruling], and should instead advance a clear proposal of its own, consistent with the APA") (citing *Perez v. Mortg. Bankers Ass'n*, 575 U.S. 92 (2015)); San Diego Comments at 1, 3 (same).

[36] For example, we do not address WIA's and CTIA's requests for clarification that the shot clock and deemed granted rules apply to all permits relating to a proposed modification, including authorizations relating to compliance with health and safety rules. WIA Petition for Decl. Ruling at 2; CTIA Petition for Decl. Ruling at 3-4, 7-9. Nor do we address CTIA's request for clarification of the permissible increases in the height of base stations. CTIA Petition for Decl. Ruling at 15-16. We do, however, clarify some of the limitations raised by WIA that apply to "conditions of approval" under section 1.6100(b)(7)(vi). WIA Petition for Decl. Ruling at 14-16, 19-24. Additionally, as noted herein, we offer other clarifications and seek comment on rule changes.

[37] In a few instances, we also provide further guidance on the interpretation of the underlying statute with regard to issues that the rules and the *2014 Infrastructure Order* do not directly address.

ambiguities leading to disputes that could undermine the goals of the Spectrum Act, i.e., to advance wireless broadband service.[38]

A. Commencement of Shot Clock

14. Section 1.6100(c)(2) provides that the 60-day review period for eligible facilities requests begins "on the date on which an applicant submits a request seeking approval."[39] If the local jurisdiction "fails to approve or deny a request seeking approval under this section within the timeframe for review (accounting for any tolling), the request shall be deemed granted."[40] The *2014 Infrastructure Order* discusses the procedures that local governments need to implement in order to carry out their obligations to approve eligible facilities requests within 60 days;[41] it does not, however, define the date on which an applicant is deemed to have submitted an eligible facilities request for purposes of triggering the 60-day shot clock.

15. There is evidence in the record that some local jurisdictions effectively postpone the date on which they consider eligible facilities requests to be duly filed (thereby delaying the commencement of the shot clock) by treating applications as incomplete unless applicants have complied with time-consuming requirements. Such requirements include meeting with city or county staff, consulting with neighborhood councils, obtaining various certifications, or making presentations at public hearings.[42] While some stakeholders may have assumed that, after the *2014 Infrastructure Order*, local governments would develop procedures designed to review and approve covered requests within a 60-day shot clock period,[43] many have not done so and instead continue to require applicants to apply for forms of authorizations that entail more "lengthy and onerous processes" of review.[44] In such jurisdictions, applicants may need to obtain clearance from numerous, separate municipal departments, which could make it difficult to ascertain whether or when the shot clock has started to run.[45]

---

[38] *See 2014 Infrastructure Order*, 29 FCC Rcd at 12922-26, paras. 135-44.

[39] 47 CFR § 1.6100(c)(2); *see also id.* § 1.6100(c)(3) ("The 60-day [shot clock] period begins to run when the application is filed. . . ."); *2014 Infrastructure Order*, 29 FCC Rcd at 12957, para. 216 ("[I]f an application covered by Section 6409(a) has not been approved by a State or local government within 60 days *from the date of filing*, accounting for any tolling, . . . the reviewing authority will have violated Section 6409(a)'s mandate to approve and not deny the request, and the request will be deemed granted") (emphasis added).

[40] 47 CFR § 1.6100(c)(4); *see also 2014 Infrastructure Order*, 29 FCC Rcd at 12957, para. 216 (noting that the 60-day "timeframe sets an absolute limit that—in the event of a failure to act— results in a deemed grant.").

[41] *2014 Infrastructure Order*, 29 FCC Rcd at 12955-58, paras. 212-13, 215-21.

[42] *See, e.g.*, Crown Castle Comments at 21 & n.51; AT&T Comments at 13, n.35 (citing *Douglas Cty. v. Crown Castle USA, Inc.*, 411 F. Supp. 3d 1176, 1182 (D. Colo. 2019) (noting county's characterization of carrier's filing as a "'Presubmittal Review Request,' not a formal EFR application"), *amended and superseded on other grounds*, No. 18-cv-03171-DDD-NRN, 2020 WL 109208 (D. Colo. Jan. 9, 2020)).

[43] *2014 Infrastructure Order*, 29 FCC Rcd at 12956, para. 214.

[44] *See, e.g.*, WIA Petition for Decl. Ruling at 8-9; T-Mobile Comments at 17 & n.64 (citing T-Mobile Reply Comments, WT Docket No. 13-238 (filed Mar. 5, 2014), Attach. A (Declaration of John L. Zembrusky) (identifying municipalities that lack section 6409(a) procedures and that insist on full-scale zoning review)).

[45] *See, e.g.*, T-Mobile Reply at 4-5 (describing municipal ordinances or informal processes in Richmond, CA, Torrance, CA, and Chapel Hill, NC, that require applicants to obtain building permits either before or after the eligible facilities request shot clock runs); Crown Castle Comments at 5-6 (describing the processes of a township in New York, a county in California, and town in Massachusetts that each require review by multiple municipal departments before a building permit will be approved); CTIA Petition for Decl. Ruling at 18 & n.41 (discussing several localities that require "sequential" approvals, in which a locality will issue a conditional use permit or other document that approves the eligible facilities request, and then also require an applicant to obtain a building permit or other authorization, which the locality claims is not subject to the section 6409(a) shot clock).

16. To address uncertainty regarding the commencement of the shot clock, we clarify that, for purposes of our shot clock and deemed granted rules, an applicant has effectively submitted a request for approval that triggers the running of the shot clock when it satisfies *both* of the following criteria: (1) the applicant takes the first procedural step that the local jurisdiction requires as part of its applicable regulatory review process under section 6409(a), and, to the extent it has not done so as part of the first required procedural step, (2) the applicant submits written documentation showing that a proposed modification is an eligible facilities request.[46]

17. By requiring that an applicant take the first procedural step required by the locality, our goal is to give localities "considerable flexibility" to structure their procedures for review of eligible facilities requests,[47] but prevent localities from "impos[ing] lengthy and onerous processes not justified by the limited scope of review contemplated" by section 6409(a).[48] In taking the first procedural step that the local jurisdiction requires as part of its applicable regulatory review process, applicants demonstrate that they are complying with a local government's procedures. The second criterion—requiring applicants to submit written documentation showing that the proposed modification is an eligible facilities request—is necessary because localities must have the opportunity to review this documentation to determine whether the proposed modification is an eligible facilities request that must be approved within 60 days.[49] We anticipate that the documentation sufficient to start the shot clock under our criteria might include elements like a description of the proposed modification and an explanation of how the proposed modification is an eligible facilities request.[50] We find that these criteria strike a reasonable balance between local government flexibility and the streamlined review envisioned by section 6409(a).[51]

---

[46] We provide this limited guidance in order to resolve uncertainty about what the Commission intended by its reference to when an applicant "submits a request seeking approval under this section." Although as noted above interested parties have received notice and extended opportunity to comment on these proposals, this guidance does not constitute a legislative rule, and we disagree with commenters that a further rulemaking would be required. *See, e.g.*, NATOA Reply at 5 (arguing that a "good faith" standard would be "a change to—not a clarification of—the current rule"); Letter from Nancy Werner, General Counsel, NATOA, et. al. to Marlene H. Dortch, Secretary, FCC, WT Docket No. 19-250 et al., at 2 (filed Jun. 2, 2020) (NATOA June 2, 2020 *Ex Parte* Letter) (asserting that that clarification of what certain terms means should be preceded with notice and comment and codified in the Commission's rules); San Diego Comments at 6-8. The localities' comments are either directed at relief not granted in this *Declaratory Ruling* and are therefore outside its scope, or critical of interpretations that are exempt from the Administrative Procedures Act's notice-and-comment requirements as "a declaratory order to terminate a controversy or remove uncertainty." *See* 5 U.S.C. § 554(e). *See also*, *e.g.*, *American Mining Congress v. Mine Safety and Health Org.*, 995 F.2d 1106, 1112 (D.C. Cir. 1993) (upholding agency interpretive rules finding that certain X-ray readings qualify as "diagnoses" of lung disease within the meaning of agency's regulations and observing that "[a] rule does not, in this inquiry, become an amendment [to an existing legislative rule] merely because it supplies crisper and more detailed lines than the authority being interpreted").

[47] *2014 Infrastructure Order*, 29 FCC Rcd at 12956, para. 214 & n.595.

[48] *Id.* at 12955, para. 212.

[49] *Id.* at 12956-57, paras. 215-16 (60 days is sufficient for eligible facilities request review).

[50] Commenters have provided examples of the type of documentation that they submit with their applications, including a checklist showing that the proposed modifications do not meet any of the criteria for a substantial change in the physical dimensions of the structure. *See* Letter from Thomas S. Anderson, Senior Attorney, Crown Castle, to Marlene H. Dortch, Secretary, FCC, WT Docket No. 19-250 and RM-11849, at 2-3, Attach., Appx B at 9 (filed June 2, 2020) (Crown Castle June 2020 *Ex Parte* Letter); Letter from John A. Howes, Jr., Government Affairs Counsel, WIA, to Marlene H. Dortch, Secretary, FCC, WT Docket No. 19-250 and RM-11849, at 3 (filed June 1, 2020) (WIA June 2020 *Ex Parte* Letter).

[51] *Cf.* WIA Petition for Decl. Ruling at 8-9 (seeking ruling that "the Section 6409(a) shot clock begins to run once an applicant" makes "a good faith attempt to seek the necessary government approvals" by "submitting an EFR under any reasonable process," *i.e.*, "upon initial written submission in the case where a state or local government requires any type of pre-application submission or meetings."). Similarly, a number of providers request a ruling that the

(continued….)

18. In addition, we find that further clarifications are needed to achieve our goal of balancing local government flexibility with the streamlined review envisioned by section 6409(a). First, we clarify that a local government may not delay the triggering of the shot clock by establishing a "first step" that is outside of the applicant's control or is not objectively verifiable. For example, if the first step required by a local government is that applicants meet with municipal staff before making any filing, the applicant should be able to satisfy that first step by making a written request to schedule the meeting—a step within the applicant's control. In this example, the 60-day shot clock would start once the applicant has made a written request for the meeting and the applicant also has satisfied the second of our criteria (documentation). While we do not wish to discourage meetings between applicants and the local governments, as we recognize that such consultations may help avoid errors that localities have identified as leading to delays,[52] such meetings themselves should not be allowed to cause delays or prevent these requests from being timely approved. As an additional example, a local government could not establish as its first step a requirement that an applicant demonstrate that it has addressed all concerns raised by the public, as such a step would not be objectively verifiable.

19. Second, we clarify that a local government may not delay the triggering of the shot clock by defining the "first step" as a combination or sequencing of steps, rather than a single step. For example, if a local government defines the first step of its process as separate consultations with a citizens' association, a historic preservation review board, and the local government staff, an applicant will trigger the shot clock by taking any one of those actions, along with satisfying the second of our criteria (documentation).[53] Once the shot clock has begun, it would not be tolled if the local government were to deny, delay review of, or require refiling of the application on the grounds that the local government's separate consultation requirements were not completed.[54] While we expect applicants to act in good faith to fulfill reasonable steps set forth by a local government that can be completed within the 60 day period,[55] the local government would bear responsibility for ensuring that any steps in its process, as well as the substantive review of the proposed facility modification, are all completed within 60 days. If not, the eligible facilities request would be deemed granted under our rules.

(Continued from previous page)
shot clock is not tolled by mandatory pre-application meetings or public hearings. *See, e.g.*, CTIA Comments at 12-13; Crown Castle Comments at 21-22; T-Mobile Comments at 4, 17; WISPA Comments at 6. Numerous providers support these proposals. *See, e.g.*, CTIA Comments at 13; AT&T Comments at 12-14; Crown Castle Comments at 22-23; Nokia Comments at 5-6; T-Mobile Comments at 16; Verizon Comments at 8-9; WISPA Comments at 6. By specifying concrete steps that are more specific and verifiable than the "good faith" standard that WIA proposed, we believe we will facilitate compliance by both localities and applicants. *See, e.g.*, NATOA Comments at 6 (criticizing WIA's proposed "good faith" standard); San Diego Comments at 6-8 (same).

[52] *See, e.g.*, NLC Comments at 25-26; San Diego Comments at 29-30; Seattle Comments at 2 (asserting that applicants' errors account for far more delays in the review process for eligible facilities requests than improper review processes and arguing that pre-application meetings help applicants avoid errors and thus expedite review).

[53] 47 CFR § 1.6100(c)(1).

[54] *See 2014 Infrastructure Order*, 29 FCC Rcd at 12957, para. 217 ("[A]n initial determination of incompleteness tolls the running of the [shot clock] period only if the State or local government provides notice to the applicant in writing within 30 days of the application's submission [and]. . . clearly and specifically delineate[s] the missing information in writing. . . . Further, consistent with the documentation restriction established above, *the State or municipality may only specify as missing [such]information and supporting documents that are reasonably related to determining whether the request meets the requirements of Section 6409(a).*") (emphasis added). *See also* 47 CFR § 1.6100(c)(1) (setting forth the documentation required to be submitted by the eligible facilities request applicant); 47 CFR § 1.6100(c)(3) (setting forth criteria for tolling of the shot clock).

[55] *See, e.g.*, NATOA *Ex Parte* Letter at 3 (raising concerns that an applicant could delay a meeting set by the locality to thwart the locality's process); *see also* Letter from Colin Byrd, Mayor, City of Greenbelt, to Marlene H. Dortch, Secretary, FCC, WT Docket No. 19-250 and RM-11849, at 2 (filed June 1, 2020) (Greenbelt *Ex Parte* Letter) (same).

20. Third, we clarify that a local government may not delay the start of the shot clock by declining to accept an applicant's submission of documentation intended to satisfy the second of our criteria for starting the shot clock. In addition, a local government may not delay the start of the shot clock by requiring an applicant to submit documentation that is not reasonably related to determining whether the proposed modification is an eligible facilities request.[56] We clarify how our documentation rules apply in the context of the shot clock to provide certainty that unnecessary documentation requests do not effectively delay the shot clock as part of the local government's "first step," even if providing that documentation would be within the applicant's control and could be objectively verified. For example, if a locality requires as the first step in its section 6409(a) process that an applicant meet with a local zoning board, that applicant would not need to submit local zoning documentation as well in order to trigger the shot clock.

21. Fourth, we note that a local government may use conditional use permits, variances, or other similar types of authorizations under the local government's standard zoning or siting rules, in connection with the consideration of an eligible facilities request. We clarify, however, that requirements to obtain such authorizations may not be used by the local government to delay the start of or to toll the shot clock under the section 6409(a) process. The shot clock would begin once the applicant takes the first step in whatever process the local government uses in connection with reviewing applications subject to section 6409(a) and satisfies the second of our criteria (documentation).[57] Subsequently, if the locality rejects the applicant's request to modify wireless facilities as incomplete based on requirements relating to such permits, variances, or similar authorizations, the shot clock would not be tolled and the application would be deemed granted after 60 days if the application constitutes an eligible facilities request under our rules.[58]

22. Fifth, we note that some jurisdictions have not established specific procedures for the review and approval of eligible facilities requests under section 6409(a). In those cases, we clarify that, for purposes of triggering the shot clock under section 6409(a), the applicant can consider the first

---

[56] *See* 47 CFR § 1.6100(c)(1). This rule provides that "[w]hen an applicant asserts in writing that a request for modification is covered by this section, a State or local government may require the applicant to provide documentation or information only to the extent reasonably related to determining whether the request meets the requirements of this section. A State or local government may not require an applicant to submit any other documentation, including but not limited to documentation intended to illustrate the need for such wireless facilities or to justify the business decision to modify such wireless facilities." *See also 2014 Infrastructure Order*, 29 FCC Rcd at 12956, para. 214 & n.595 (clarifying documentation requirements).

[57] We reject localities' suggestions that the shot clock should not commence until an applicant submits documentation required for all necessary permits, as such an approach is inconsistent with federal law. *See* 47 CFR § 1.6100(c)(1)-(2); *see also* Letter from Gerard Lederer, Joseph Van Eaton, Gail Karish, Andrew McCardle, Counsel for the City of Wilmington, DE et al., Best & Krieger LLP, to Marlene H. Dortch, Secretary, FCC, WT Docket No. 19-250 and RM-11849, at 21-22 (filed Jun. 2, 2020) (Wilmington *Ex Parte* Letter) (suggesting that applicants should be required to submit documentation for all necessary permits before the shot clock starts). To the extent localities point to the *2018 Small Cell Order* as a reason that localities should be able to require documentation for all permits before the shot clock commences, we note that the applicable statutes provide different regimes for eligible facilities requests under section 6409 as compared to siting requests for small cells under section 332. *See* Wilmington *Ex Parte* Letter at 21-22 (arguing that the *2018 Small Cell Order* "suggests that on submission of an application, shot clocks begin running on all permits required to deploy; it follows that all materials relevant to an application must be submitted with the application").

[58] Localities may only toll the shot clock "by mutual agreement" or if the locality "determines that the application is incomplete." *See* 47 CFR § 1.6100(c)(3) (implementing section 6409(a) and setting forth the process for a locality to toll the timeframe for incompleteness); *see also* Wilmington *Ex Parte* Letter at 22 (filed Jun. 2, 2020) (arguing that the Commission should clarify the continued applicability of the "notice of incompleteness procedure" in section 1.6100(c)(3)(i)).

procedural step to be submission of the type of filing that is typically required to initiate a standard zoning or siting review of a proposed deployment that is not subject to section 6409(a).[59]

23. We find that these clarifications serve to remove uncertainty about the scope and meaning of various provisions of section 1.6100 consistent with the text, history, and purpose of the *2014 Infrastructure Order*.[60] We also note that the commencement of the shot clock does not excuse the applicant from continuing to follow the locality's procedural and substantive requirements (to the extent those requirements are consistent with the Commission's rules), including obligations "to comply with generally applicable building, structural, electrical, and safety codes or with other laws codifying objective standards reasonably related to health and safety."[61]

B. Height Increase for Towers Outside the Public Rights-of-Way

24. Adding new collocated equipment near or at the top of an existing tower can be an efficient means of expanding the capacity or coverage of a wireless network without the disturbances associated with building an entirely new structure. Adding this equipment to an existing tower would change the tower's physical dimensions, but if such a change is not "substantial," then a request to implement it would qualify as an eligible facilities request, and a locality would be required to approve it. Section 1.6100(b)(7)(i) provides that a modification on a tower outside of the public rights-of-way would cause a substantial change if it "increases the height of the tower by more than 10% or by the height of one additional antenna array with separation from the nearest existing antenna not to exceed twenty feet, whichever is greater."[62]

25. Commenters assert that they have two different interpretations of the meaning of this language in section 1.6100(b)(7)(i). Industry commenters read section 1.6100(b)(7)(i) as allowing a new antenna to be added without being a substantial change if there is no more than twenty feet in

---

[59] Comparable modification requests might include applications to install, modify, repair, or replace wireless transmission equipment on a structure that is outside the scope of section 6409(a), or to mount cable television, wireline telephone, or electric distribution cables or equipment on outdoor towers or poles. Where the first step in the process is submission of the type of filing that is typically required for comparable modification requests, we note that applicants are not required to file any documentation that is inconsistent with the Commission's rules for eligible facilities requests under section 6409(a). *See* 47 CFR § 1.6100(c)(1).

[60] We note that sections 253 and 332(c)(7) generally prohibit local governments from making regulatory decisions that "prohibit or have the effect of prohibiting" the provision of personal wireless service or other forms of telecommunications service by any provider. *See* 47 U.S.C. §§ 253(a) and 332(c)(7)(B)(i)(I). Accordingly, localities' regulatory decisions affecting eligible facilities requests are subject to sections 253 and 332(c)(7) as well as section 6409(a). Unless one of the narrow statutory safe harbors applies, localities may not use procedural mechanisms to deny covered requests and may not deny individual eligible facilities requests in a manner that "materially inhibits the provision of such [telecommunications] services," including by materially inhibiting providers' ability to "densify[] a wireless network, introduce[e] new services or otherwise improv[e] service capabilities." *2018 Small Cell Order*, 33 FCC Rcd at 9104-05, para. 37. Nor may localities regulate in a manner that creates *de facto* moratoria in the context of eligible facilities requests, such as "frequent and lengthy delays in. . . issuing permits and processing applications" or imposing "onerous conditions." *2018 Moratorium Order*, 33 FCC Rcd at 7779-80, paras. 149-150. While some delay in deployment does not constitute a *de facto* moratorium, "[s]ituations cross the line into *de facto* moratoria where the delay continues for an unreasonably long or indefinite amount of time such that providers are discouraged from filing applications, or the action or inaction has the effect of preventing carriers from deploying certain types of facilities or technologies." *Id.* at 7781, para. 150.

[61] *2014 Infrastructure Order*, 29 FCC Rcd at 12951, para. 202.

[62] 47 CFR § 1.6100(b)(7)(i) (emphasis added). Section 1.6100(b)(7)(i) establishes different standards governing whether a "substantial change" would result from an increase in the height of a tower located outside of the public rights-of-way versus an increase in the height of a base station (*i.e.*, a structure other than a tower that supports collocated transmission equipment) or a tower located within the rights-of-way. Our focus here is on the definition of height increases for towers outside of the rights-of-way.

"separation" between the existing and new antennas, and that the size/height of the new antenna itself is irrelevant to the concept of "separation."[63] Localities appear to be of the view, however, that such an interpretation strains what the statute and regulations would permit—creating different standards for antenna height depending on where it is located and leading to indefinite increases in antenna height under a streamlined process not designed for that purpose.[64] Adding an antenna array to a tower out of the public right-of-way that increases the height of the tower would not be considered a substantial change, by itself, if there is no more than twenty feet of separation between the nearest existing antenna. The phrase "separation from the nearest existing antenna" means the distance from the top of the highest existing antenna on the tower to the *bottom* of the proposed new antenna to be deployed above it. Thus, when determining whether an application satisfies the criteria for an eligible facilities request, localities should not measure this separation from the top of the existing antenna to the *top* of the new antenna, because the height of the new antenna itself should not be included when calculating the allowable height increase. Rather, under our interpretation, the word "separation" refers to the distance from the top of the existing antenna to the bottom of the proposed antenna. Interpreting "separation" otherwise to include the height of the new antenna could limit the number of proposed height increases that would qualify for section 6409(a) treatment, given typical antenna sizes and separation distances between antennas, which would undermine the statute's objective to facilitate streamlined review of modifications of existing wireless structures.[65]

26. Specifically, and in response to commenters' arguments regarding the language in section 1.6100(b)(7)(i), we find that our resolution today is consistent with the long-established interpretation of the comparable standard set forth in the 2001 *Collocation Agreement* for determining the maximum size of a proposed collocation that is categorically excluded from historic preservation review.[66] Commission staff explained, in a fact sheet released in 2002, that under this provision of the *Collocation Agreement*, if a "150-foot tower… already [has] an antenna at the top of the tower, the tower height could increase by up to 20 feet [*i.e.*, the "separation" distance] *plus* the height of a new antenna to be located at the top of the tower" without constituting a substantial increase in size.[67] That standard was the source of the standard for the allowable height increases for towers outside the rights-of-way that the Commission adopted in the *2014 Infrastructure Order*.[68]

---

[63] *See* CTIA Comments at 10-11; Crown Castle Comments at 15-16; CTIA and Crown Castle urge the Commission to clarify that, in the case of a tower, section 1.6100(b)(7)(i) allows a new antenna to be added without constituting a substantial change if there is up to 20 feet in "separation" between the existing and new antennas. They assert that the size/height of the new antenna itself is irrelevant to the concept of "separation." Both commenters argue that this interpretation is consistent with the Collocation NPA and is needed to counter locality attempts to include the dimensions of the new antenna itself into the 20 feet limit.

[64] *See* San Diego Comments at 47-48; *see also* San Diego Reply at 80-82 (arguing that the requested clarification would eliminate any maximum height limit for towers).

[65] *Contra* Letter from Jud Ashman, Mayor, City of Gaithersburg, MD, to Marlene H. Dortch, Secretary, FCC, WT Docket No. 19-250 and RM-11849, at 2 (stating that Gaithersburg has generally interpreted the 10% or 20 feet height increase to include the new antenna).

[66] *See* National Programmatic Agreement for the Collocation of Wireless Antennas, 47 CFR pt. 1, Appx. B (*Collocation Agreement*), § I.E (a collocation on an existing tower causes a "substantial increase in the size of the tower" if it would increase the tower's existing height by an amount more than "10%, or by the height of one additional antenna array with separation from the nearest existing antenna not to exceed twenty feet, whichever is greater, except that the mounting of the proposed antenna may exceed the size limits set forth in this paragraph if necessary to avoid interference with existing antennas.").

[67] *Wireless Telecommunications Bureau and Mass Media Bureau Announce the Release of a Fact Sheet Regarding the March 16, 2001 Antenna Collocation Programmatic Agreement*, Public Notice, 17 FCC Rcd 508 (2002).

[68] *2014 Infrastructure Order*, 29 FCC Rcd at 12946, para. 192.

27. Our interpretation also aligns with the clarification sought by WIA and other industry parties.[69] We reject the argument that this interpretation creates irrational inconsistences among height increase standards depending on the type of structure and whether a tower is inside or outside the rights-of-way.[70] As we discussed in the *2014 Infrastructure Order*, limits on height and width increases should depend on the type and location of the underlying structure.[71] We therefore adopted the *Collocation Agreement's* "substantial increase in size" test for towers outside the rights-of-way,[72] and we adopted a different standard for non-tower structures.[73] Localities are rearguing an issue already settled in the *2014 Infrastructure Order* when they urge that the same height increase standard should apply to different types of structures.[74] We also reject the argument that this interpretation would lead to virtually unconstrained increases in the height of such towers.[75] These concerns are unwarranted because the*2014 Infrastructure Order* already limits the cumulative increases in height from eligible modifications and nothing in this *Declaratory Ruling* changes those limits.[76]

28. Our clarification is limited to section 1.6100(b)(7)(i) and the maximum increase in the height of a tower outside the rights-of-way allowed pursuant to an eligible facilities request under section 6409(a). We remind applicants that "eligible facility requests covered by section 6409(a) must comply with any relevant Federal requirement, including any applicable Commission, FAA, NEPA, or section 106 [historic review] requirements."[77]

C. Equipment Cabinets

29. To upgrade to 5G and for other technological and capacity improvements, providers often add equipment cabinets to existing wireless sites. Section 1.6100(b)(7)(iii) provides that a proposed modification to a support structure constitutes a substantial change if "it involves installation of more than the standard number of new equipment cabinets for the technology involved, but not to exceed four cabinets."[78] Some localities suggest that telecommunications transmission equipment manufactured with outer protective covers can be "equipment cabinets" under section 1.6100(b)(7)(iii) of the rules.[79] We

---

[69] WIA Petition for Decl. Ruling at 17-18; CTIA Comments at 10-11; Crown Castle Comments at 15-16.

[70] *Cf.* San Diego Comments at 47-48 (arguing that WIA's interpretation would create an inconsistency between the height increase standard for towers outside public rights-of-way and the standard for other structures).

[71] *2014 Infrastructure Order*, 29 FCC Rcd at 12946, para. 192.

[72] 47 CFR § 1.6100(b)(7)(i); *2014 Infrastructure Order*, 29 FCC Rcd at 12946, para. 192; *Collocation Agreement* § I.C(1).

[73] *2014 Infrastructure Order*, 29 FCC Rcd at 12946-47, para. 193; *see* 47 CFR § 1.6100(b)(7)(i) (stating a substantial change would occur for other eligible support structures when, "it increases the height of the structure by more than 10% or more than ten feet, whichever is greater").

[74] 47 CFR § 1.6100(b)(7)(i). *See 2014 Infrastructure Order*, 29 FCC Rcd at 12946-48, paras. 193-95 (explaining reasons for different standards).

[75] San Diego Reply at 80-82 (quoting *2014 Infrastructure Order*, 29 FCC Rcd at 12949, para. 197).

[76] 47 CFR § 1.6100(b)(7)(i)(A); *2014 Infrastructure Order*, 29 FCC Rcd at 12948-49, paras. 196-97 (stating that "our substantial change criteria for changes in height should be applied as limits on cumulative changes; otherwise, a series of permissible small changes could result in an overall change that significantly exceeds our adopted standards.").

[77] *2014 Infrastructure Order*, 29 FCC Rcd at 12951, para. 203.

[78] *See* 47 CFR § 1.6100(b)(7)(iii). Section 1.6100(b)(7)(iii) imposes additional restrictions on equipment cabinet installations that constitute a substantial change in the context of towers in the public rights-of-way and base stations either within or outside the public rights-of-way. Petitioners do not raise issues regarding these additional provisions.

[79] San Diego Comments at 41-42, 44.

conclude that localities are interpreting "equipment cabinet" under section 1.6100(b)(7)(iii) too broadly to the extent they are treating equipment itself as a cabinet simply because transmission equipment may have protective housing. Nor does a small piece of transmission equipment mounted on a structure become an "equipment cabinet" simply because it is more visible when mounted above ground.[80] Consistent with common usage of the term "equipment cabinet" in the telecommunications industry, small pieces of equipment such as remote radio heads/remote radio units, amplifiers, transceivers mounted behind antennas, and similar devices are not "equipment cabinets" under section 1.6100(b)(7)(iii) if they are not used as physical containers for smaller, distinct devices.[81] Moreover, we note that section 1.6100(b)(3) defines an "eligible facilities request" (i.e., a request entitled to streamlined treatment under section 6409(a)) as any request for modification of an existing tower or base station that does not substantially change the physical dimensions of such tower or base station and that involves the collocation, removal or replacement of "transmission equipment."[82] Interpreting "transmission equipment," an element required in order for a modification to qualify for streamlined treatment, to be "equipment cabinets," an element that is subject to numerical limits that can cause the modification not to qualify for streamlined treatment, would strain the intended purposes of sections 1.6100(b)(3) and 1.6100(b)(7)(iii). We do not address here other aspects of the definition of equipment cabinets on which industry commenters seek clarification.[83]

30. In addition, we clarify that the maximum number of additional equipment cabinets that can be added under the rule is measured for each separate eligible facilities request. According to WIA, one unidentified city in Tennessee interprets the term "not to exceed four cabinets" in section 1.6100(b)(7)(iii) as "setting a cumulative limit, rather than a limit on the number of cabinets associated with a particular eligible facilities request."[84] We find that such an interpretation runs counter to the text of section 1.6100(b)(7)(iii), which restricts the number of "new" cabinets per eligible facilities request. The city's interpretation ignores the fact that the word "it" in the rule refers to a "modification" and supports the conclusion that the limit on equipment cabinet installations applies separately to each eligible facilities request.[85]

---

[80] *Contra id.* at 44 (stating, "CTIA suggests that the difference is the size and location of the equipment enclosure, not its function. To adopt the industry's definition is nonsensical given that it is the function that controls, and locational visibility matters. The industry omits the fact that RRUs located near the antennas creates substantial visible bulk, as do RRUs and associated equipment above ground, and that bulk is more visible than ground mounted cabinets or for new cabinets installed existing enclosures.").

[81] *Accord* CTIA Petition for Decl. Ruling at 13; WIA Petition for Decl. Ruling at 13; Crown Castle Comments at 11. *Cf.* San Diego Comments at 42 & n.114 (citing technical documents referring to equipment cabinets as containers for smaller devices).

[82] 47 CFR § 1.6100(b)(3).

[83] We find this relief to suffice at this stage and thus do not address the industry parties' contention that, in the portion of section 1.6100(b)(7)(iii) applicable to any eligible support structure, the term "equipment cabinets" applies only to cabinets installed on the ground and not to those mounted above ground level on the side of structures. *See* CTIA Petition for Decl. Ruling at 5, 13-14; WIA Petition for Decl. Ruling at 13-14; AT&T Comments at 8-10; Crown Castle Comments at 10-11; T-Mobile Comments at 4-5, 19-20; Verizon Comments at 9; *contra* San Diego Comments at 41-44; NLC Comments at 20-21.

[84] WIA Petition for Decl. Ruling at 13.

[85] This conclusion is also supported by the context of the rule as a whole. The number and size of preexisting cabinets are irrelevant to the limitation on equipment cabinets on eligible support structures, in contrast to the rest of the rule, which takes into account whether there are preexisting ground cabinets at the site and whether proposed new cabinets' volume exceeds the volume of preexisting cabinets by more than 10%. 47 CFR § 1.6100(b)(7)(iii). Wilmington's reliance on the cumulative height limit in section 1.6100(b)(7)(i)(A) undercuts its argument for a similar limit on equipment cabinets. Wilmington *Ex Parte* Letter at 15-17. The rule and *2014 Infrastructure Order*

(continued….)

31. Several localities argue that this clarification would permit an applicant to add an unlimited number of new equipment cabinets to a structure so long as the applicant proposes adding them in increments of four or less.[86] We disagree that this clarification permits an unlimited number of cabinets on a structure. The text of section 1.6100(b)(7)(iii) limits the number of equipment cabinets per modification to no more than "the standard number of new equipment cabinets for the technology involved."

D. Concealment Elements

32. Section 1.6100(b)(7)(v) states that a modification "substantially changes" the physical dimensions of an existing structure if "[i]t would defeat the concealment elements of the eligible support structure."[87] The *2014 Infrastructure Order* provides that, "in the context of a modification request related to concealed or 'stealth'-designed facilities —*i.e.*, facilities designed to look like some feature other than a wireless tower or base station—any change that defeats the concealment elements of such facilities would be considered a 'substantial change' under Section 6409(a)."[88] The *2014 Infrastructure Order* notes that both locality and industry commenters generally agreed that "a modification that undermines the concealment elements of a stealth wireless facility, such as painting to match the supporting façade or artificial tree branches, should be considered substantial under Section 6409(a)."[89]

33. Stakeholders subsequently have interpreted the definition of "concealment element" and the types of modifications that would "defeat" concealment in different ways. Petitioners and industry commenters urge the Commission to clarify that the term "concealment element" only refers to "a stealth facility or those aspects of a design that were specifically intended to disguise the appearance of a facility, such as faux tree branches or paint color."[90] T-Mobile states that some localities are "proffering 'creative or inappropriate' regulatory interpretations of what a concealment element is."[91] Locality commenters counter that there is more to concealment than "fully stealthed facilities and semi-stealthed monopines."[92] They argue that the proposed changes would undermine the ability of local jurisdictions to enforce regulations designed to conceal equipment.[93] NLC asserts that many attributes of a site contribute to concealment, such as the "specific location of a rooftop site, or the inclusion of equipment in a particular architectural feature."[94] Locality commenters contend that limiting concealment elements to features

(Continued from previous page)
explicitly establish a cumulative limit on height increases but notably omits such a limit on equipment cabinets. 47 CFR § 1.6100(b)(7)(i)(A); *2014 Infrastructure Order*, 29 FCC Rcd at 12948-49, paras. 196-97.

[86] See, e.g., Letter from John Caulfield, City Manager, City of Lakewood, WA, to Marlene H. Dortch, Secretary, FCC, WT Docket No. 19-250 and RM-11849, at 1 (filed May 29, 2020) (Lakewood Ex Parte Letter); Greenbelt Ex Parte Letter at 2; NATOA June 2, 2020 Ex Parte Letter at 3.

[87] 47 CFR § 1.6100(b)(7)(v).

[88] *2014 Infrastructure Order*, 29 FCC Rcd at 12949-50, para. 200.

[89] *Id.* at 12949-50, para. 200.

[90] CTIA Petition for Decl. Ruling at 12; *see also* WIA Reply at 24; T-Mobile Comments at 4, 8; AT&T Comments at 7; ATC Comments at 9-10; Crown Castle Comments at 9-10.

[91] T-Mobile Comments at 7-8; *see also* AT&T Comments at 6-7; ATC Comments at 9-10; Crown Castle Comments at 8.

[92] NLC Comments at 17.

[93] Gwen Kennedy Comments at 1 (rec. Nov. 13, 2019) (filed on behalf of Loudoun County, Virginia) (Loudoun County Comments).

[94] NLC Comments at 17, 19.

identified in the original approval would negate land use requirements that were a factor in the original deployment but not specified as such.[95]

34. *Clarification of "Concealment Element."* We clarify that concealment elements are elements of a stealth-designed facility intended to make the facility look like something other than a wireless tower or base station.[96] The *2014 Infrastructure Order* defines "concealed or 'stealth'"-designed facilities as "facilities designed to look like some feature other than a wireless tower or base station," and further provides that any change that defeats the concealment elements of *such* facilities would be considered a substantial change under section 6409(a).[97] Significantly, the *2014 Infrastructure Order* identified parts of a stealth wireless facility such as "painting to match the supporting façade or artificial tree branches" as examples of concealment elements.[98] We agree with industry commenters that concealment elements are those elements of a wireless facility installed for the purpose of rendering the "appearance of the wireless facility as something fundamentally different than a wireless facility,"[99] and that concealment elements are "confined to those used in stealth facilities."[100]

35. We disagree with localities who argue that any attribute that minimizes the visual impact of a facility, such as a specific location on a rooftop site or placement behind a tree line or fence, can be a concealment element.[101] As localities acknowledged in comments they submitted in response to the *2013*

---

[95] NATOA Comments at 9; *see also* Chino Hills Comments at 2; NLC Comments at 18; NLC Reply at 6; Loudoun County Comments at 1. NATOA notes that many towers and collocations were approved "long before the enactment of Section 6409 and the Commission's Rules [and there] was no way for municipalities to know that the conditions of approval would be ignored if they did not use magic words adopted years later." NATOA Comments at 9; *see also* NLC Comments at 18; San Diego Comments at 38.

[96] *Contra* NATOA Comments at 8 (contending that Petitioners' requests for clarification are a "substantial change to the Rules that would unreasonably narrow the common meaning of 'concealment elements.'"); San Diego Comments at 31 ("The Petitioners' arguments attempt to expand the scope of eligible facilities requests by narrowing the definition of concealment elements."). The rules and *2014 Infrastructure Order* do not provide detailed guidance on when modifications "defeat the concealment elements" under section 1.6100(b)(7)(v), and we disagree that providing clarity on existing language constitutes a rule change. *Contra* Letter from Scott Hugill, City Manager, City of Mountainlake Terrace, to Marlene Dortch, Secretary, FCC, WT Docket No. 19-250 and RM-11849, at 2 (filed June 1, 2020).

[97] *2014 Infrastructure Order*, 29 FCC Rcd at 12950, para. 200.

[98] *Id.* at 12949-50, para. 200; *see also* WIA Petition for Decl. Ruling at 11 ("Faux tree branches serve no other purpose than to create the appearance that a tower is a tree. Painting a rooftop antenna to match the building serves no purpose other than to enhance the appearance of the building.").

[99] WIA Petition for Decl. Ruling at 11; *see also* AT&T Reply at 6 ("[T]he Commission should clarify [] that (1) 'concealment elements' refer only to the 'stealth' elements of a structure that disguise the structure as something other than a wireless site . . . ."); CCA Comments at 7-8 ("In the *2014 Order*, the Commission described concealment elements as those tailored to make wireless facilities 'look like some feature other than a wireless tower or base station,' and specifically identified 'painting to match the supporting façade' and 'artificial tree branches' as examples."); Letter from Cathleen Massey, Vice President of Regulatory Affairs, T-Mobile, to Marlene H. Dortch, Secretary, FCC, WT Docket No. 19-250 et. al., at 2 & n.6 (filed May 13, 2020) ("the Commission should clarify that 'concealment elements' means 'a stealth facility or those aspects of a deployment's design that were specifically intended to disguise the appearance of a facility'").

[100] CTIA Petition for Decl. Ruling at 10.

[101] *See* National League of Cities Comments at 16-17; *see also* NATOA Comments at 8-9. To the extent that municipalities argue that they have interpreted "concealment element" in the past differently from our clarification, this *Declaratory Ruling* should reduce the number of disputes between localities and applicants and help localities bring their procedures in compliance with section 6409(a). *See, e.g.,* Letter from Carol Helland, Director of Planning and Community Development, City of Redmond, CA, to Marlene H. Dortch, Secretary, FCC, WT Docket No. 19-250 and RM-11849, at 1 (filed June 2, 2020); NATOA *Ex Parte* at 3.

Infrastructure NPRM, "local governments often address visual effects and concerns in historic districts not through specific stealth conditions, but through careful placement" conditions.[102] Our rules separately address conditions to minimize the visual impact of non-stealth facilities under section 1.6100(b)(7)(vi) governing "conditions associated with the siting approval."[103] The Commission narrowly defined concealment elements to mean the elements of a stealth facility, and no other conditions fall within the scope of section 1.6100(b)(7)(v).

36. We also clarify that, in order to be a concealment element under section 1.6100(b)(7)(v), the element must have been part of the facility that the locality approved in its prior review.[104] Our clarification that concealment elements must be related to the locality's prior approval is informed by the *2014 Infrastructure Order* and its underlying record, which assumed that "stealth" designed facilities in most cases would be installed at the request of an approving local government.[105] Further, in the *2014 Infrastructure Order*, the Commission stated that a modification would be considered a substantial increase if "it would defeat the *existing* concealment elements of the tower or base station."[106] We clarify that the term "existing" means that the concealment element existed on the facility that was subject to a prior approval by the locality. In addition, the record in the *2014 Infrastructure Order*, as relied upon by the Commission, characterized stealth requirements as identifiable, pre-existing elements in place before an eligible facilities request is submitted.[107]

37. Regarding the meaning of a prior approval in the context of an "existing" concealment element, we note that section 1.6100(b)(7)(i) provides that permissible increases in the height of a tower (other than a tower in the public rights-of-way) should be measured relative to a locality's original approval of the tower or the locality's approval of any modifications that were approved prior to the passage of the Spectrum Act.[108] We find it reasonable to interpret an "existing" concealment element relative to the same temporal reference points, which are intended to allow localities to adopt legitimate requirements for approval of an original tower at any time but not to allow localities to adopt these same requirements for a modification to the original tower (except for a modification prior to the Spectrum Act when localities would not have been on notice of the limitations in section 6409(a)).[109] In other words, the purpose of section 1.6100(b)(7)(v) is to identify and preserve prior local recognition of the need for such concealment, but not to invite new restrictions that the locality did not previously identify as

---

[102] *See* City of Alexandria, Virginia; City of Arlington, Texas; City of Bellevue Washington; City of Boston, Massachusetts; City of Davis, California; City of Los Angeles, California; Los Angeles County, California; City of McAllen, Texas; Montgomery County, Maryland; City of Ontario, California; Town of Palm Beach, Florida; City of Portland, Oregon; City of Redwood City, California; City of San Jose, California; Village of Scarsdale, New York; City of Tallahassee, Florida; Texas Coalition of Cities for Utility Issues; Georgia Municipal Association; International Municipal Lawyers Association; and American Planning Association (Alexandria et al.) Reply to *2013 Infrastructure NPRM* at 18-19; *see also* Alexandria et al. Comments to *2013 Infrastructure NPRM* at 19.

[103] 47 CFR § 1.6100(b)(7)(vi).

[104] *See 2014 Infrastructure Order*, 29 FCC Rcd at 12945, 12949, paras. 188, 200.

[105] *Id.* at 12949-50, para. 200.

[106] *See id.* at 12945, para. 188 (emphasis added).

[107] *See 2013 Infrastructure NPRM*, 28 FCC Rcd at 14284, para. 127.

[108] 47 CFR § 1.6100(b)(7)(i)(A).

[109] By permitting localities to rely on concealment elements required when approving modifications of towers prior to the Spectrum Act, we address in part locality concerns about concealment conditions imposed on older structures after an original approval. *See, e.g.*, San Diego Comments at 38 (stating that WIA's request for clarification that concealment elements must have been named in the initial approval "would unfairly and retroactively punish both communities and providers who had no notice, and therefore no reason to expect that regulation would be premised upon such a requirement").

necessary. Accordingly, we clarify that under section 1.6100(b)(7)(v), a concealment element must have been part of the facility that was considered by the locality at the original approval of the tower or at the modification to the original tower, if the approval of the modification occurred prior to the Spectrum Act or lawfully outside of the section 6409(a) process (for instance, an approval for a modification that did not qualify for streamlined section 6409(a) treatment).

38. We are not persuaded by localities' arguments that our clarification would negate land use requirements that were a factor in the approval of the original deployment even if those requirements were not specified as a condition.[110] Our clarification does not mean that a concealment element must have been explicitly articulated by the locality as a condition or requirement of a prior approval. While specific words or formulations are not needed, there must be express evidence in the record to demonstrate that a locality considered in its approval that a stealth design for a telecommunications facility would look like something else, such as a pine tree, flag pole, or chimney. However, it would be inconsistent with the purpose of section 6409(a)—facilitating wireless infrastructure deployment—to give local governments discretion to require new concealment elements that were not part of the facility that was subject to the locality's prior approval.[111] We expect that this clarification will also promote the purpose of the rules to provide greater certainty to localities and applicants as to whether a concealment element exists.

39. *Clarification of "Defeat Concealment."* Next, we clarify that, to "defeat concealment," the proposed modification must cause a reasonable person to view the structure's intended stealth design as no longer effective after the modification. In other words, if the stealth design features would continue effectively to make the structure appear not to be a wireless facility, then the modification would not defeat concealment. Our definition is consistent with dictionary definitions and common usage[112] of the term "defeat" and is supported by the record.[113] Our clarification is necessary because, as industry commenters point out, some localities construe even small changes to "defeat" concealment, which delays deployment, extends the review processes for modifications to existing facilities, and frustrates the intent behind section 6409(a).[114]

---

[110] NATOA Comments at 9.

[111] *Id.*; *see also* Chino Hills Comments at 2; NLC Comments at 18; NLC Reply at 6; Gwen Kennedy Comments at 1 (rec. Nov. 13, 2019) (filed on behalf of Loudoun County, Virginia) (Loudoun County Comments) (stating that the proposed clarifications would undermine the ability of local jurisdictions to enforce regulations designed to conceal equipment). NATOA insists that many towers and collocations were approved "long before the enactment of Section 6409 and the Commission's Rules [and there] was no way for municipalities to know that the conditions of approval would be ignored if they did not use magic words adopted years later." NATOA Comments at 9; *see also* NLC Comments at 18; San Diego Comments at 38 (stating that WIA's request for clarification that concealment elements must have been named in the initial approval "would unfairly and retroactively punish both communities and providers who had no notice, and therefore no reason to expect that regulation would be premised upon such a requirement").

[112] *See Defeat*, Black's Law Dictionary (11th ed. 2019) (*Defeat* means "2. To annul or render (something) void. 3. To vanquish; to conquer (someone or something). 4. To frustrate (someone or something).").

[113] *See* Crown Castle Comments at 9-10 (suggesting that, in order to defeat a concealment element, a modification "must entirely render the concealment void or useless"); AT&T Comments at 8 (stating that a modification must "materially change" the appearance of a concealment element for there to be "substantial change").

[114] T-Mobile Comments at 7-8; Crown Castle Comments at 9-10; CCA Comments at 5; *see also* ATC Reply at 6, n.13 (arguing that adoption of Petitioners' clarifications regarding "defeat" will "allow for appropriate, real world, case-by-case analysis of those elements which actually contribute to concealment"); AT&T Comments at 6-7; CTIA Comments at 8 ("localities are broadly treating the *entire structure* as a concealment element, or otherwise improperly invoking the rule to deem a modification to be substantial"); Crown Castle Comments at 8, n.20 (stating that there are "myriads" of ways that localities claim concealment is defeated, "even when not included in siting approval: increasing the height of a monopine; increasing the height of a light pole; failure to add screens to antenna;

(continued….)

40. *Examples of Whether Modifications Defeat Concealment Elements*. We offer the following examples to provide guidance on concealment elements and whether or not they have been defeated to help inform resolution of disputes should they arise:

- In some cases, localities take the position that the placement of coaxial cable on the outside of a stealth facility constitutes a substantial change based on the visual impact of the cable. Coaxial cables typically range from 0.2 inches to slightly over a half-inch in diameter,[115] and it is unlikely that such cabling would render the intended stealth design ineffective at the distances where individuals would view a facility.[116]
- In other cases, localities have interpreted any change to the color of a stealth tower or structure as defeating concealment.[117] Such interpretations are overly broad and can frustrate Congress's intent to expedite the section 6409(a) process. A change in color must make a reasonable person believe that the intended stealth is no longer effective.[118] Changes to the color of a stealth structure can occur for many reasons, including for example, the discontinuance of the previous color. An otherwise compliant eligible facilities request will not defeat concealment in this case merely because the modification uses a slightly different paint color. Further, if the new equipment is shielded by an existing shroud that is not being modified, then the color of the equipment is irrelevant because it is not visible to the public and would not render an intended concealment ineffective. Therefore, such a change would not defeat concealment.[119]
- WIA reports that a locality in Colorado claims that a small increase in height on a stealth monopine, which is less than the size thresholds of section 1.6100(b)(7)(i)-(iv), defeats concealment and therefore constitutes a substantial change.[120] We clarify that such a

(Continued from previous page)
any change to branches on a stealth tree; addition of opaque fencing; enclosing of equipment within shelters; increasing the width of a canister on a flagpole or utility pole; and external cabling on a non-camouflaged monopole").

[115] RS Components, Ltd., *Everything You Need to Know About Coaxial Cable*, https://uk.rs-online.com/web/generalDisplay.html?id=ideas-and-advice/coaxial-cable-guide.

[116] *See, e.g.* Letter from Jim Ferrell, Mayor, City of Federal Way, WA, to Marlene H. Dortch, Secretary, FCC, WT Docket No. 19-250 and RM-11849, at 2 (filed June 1, 2020) (presenting hypotheticals involving the visibility of coaxial cables).

[117] WIA Petition for Decl. Ruling at 3 ("In many cases, these requirements are not mandated by local codes but are imposed on an ad hoc basis by local jurisdictions."); T-Mobile Reply at 14; AT&T Reply at 6-7; NLC Reply at 17-18; *see also* Letter from Alexi Maltas, Senior Vice President and General Counsel, Competitive Carriers Association, to Marlene H. Dortch, Secretary, FCC, WT Docket No. 17-79, at 2 (filed July 12, 2019) (CCA 2019 Letter).

[118] The *2014 Infrastructure Order* noted that "a replacement of exactly the same dimensions could still violate concealment elements if it does not have the same camouflaging paint as the replaced facility." 29 FCC Rcd at 12949, para. 200, n.543. For such a change in paint color to defeat concealment, however, the color of the stealth tower must make a reasonable person believe that the modified facility will no longer resemble the stealth designed facility.

[119] In a further example, according to Crown Castle, two cities in California— San Diego and Cerritos—take the position that additions or modifications of antennas on faux trees defeat concealment even if the appearance of the faux tree remains the same. *See, e.g.*, Letter from Kenneth Simon, Senior Vice President and General Counsel, Crown Castle, to Marlene H. Dortch, Secretary, FCC, WT Docket No. 17-79, at 1 (filed Aug. 10, 2018) (Crown Castle August 2018 *Ex Parte* Letter); *see also* T-Mobile Reply at 13. Additional faux branches would need to render the intended disguise (resembling a tree, in this example) ineffective in order to defeat concealment.

[120] WIA Petition for Decl. Ruling at 10.

change would not defeat concealment if the change in size does not cause a reasonable person to view the structure's intended stealth design (i.e., the design of the wireless facility to resemble a pine tree) as no longer effective after the modification.

- If a prior approval included a stealth-designed monopine that must remain hidden behind a tree line, a proposed modification within the thresholds of section 1.6100(b)(7)(i)-(iv) that makes the monopine visible above the tree line would be permitted under section 1.6100(b)(7)(v). First, the concealment element would not be defeated if the monopine retains its stealth design in a manner that a reasonable person would continue to view the intended stealth design as effective. Second, a requirement that the facility remain hidden behind a tree line is not a feature of a stealth-designed facility; rather it is an aesthetic condition that falls under section 1.6100(b)(7)(vi). Under that analysis, as explained in greater detail below, a proposed modification within the thresholds of section 1.6100(b)(7)(i)-(iv) that makes the monopine visible above the tree line likely would be permitted under section 1.6100(b)(7)(vi).

E. Conditions Associated with the Siting Approval

41. Section 1.6100(b)(7)(vi) states that a modification is a substantial increase if "[i]t does not comply with conditions associated with the siting approval of the construction or modification of the eligible support structure or base station equipment, provided however that this limitation does not apply to any modification that is non-compliant only in a manner that would not exceed the thresholds identified in § 1.61001(b)(7)(i) through (iv)." Industry commenters argue that changes specifically allowed under section 1.6100(b)(7)(i)-(iv) should not constitute a substantial change under section 1.6100(b)(7)(vi).[121] For example, the record shows that some localities claim that small increases in the size of a structure, such as increasing its height or increasing the width of its cannister, are a substantial change because they wrongly characterize any increase to a structure's visual profile or negative aesthetic impact as defeating a concealment element—even if the size changes would be within the allowances under our rules.[122]

42. Conditions associated with the siting approval under section 1.6100(b)(7)(vi) may relate to improving the aesthetics, or minimizing the visual impact, of non-stealth facilities (facilities not addressed under section 1.6100(b)(7)(v)). However, localities cannot merely assert that a detail or feature of the facility was a condition of the siting approval; there must be express evidence that at the time of approval the locality required the feature and conditioned approval upon its continuing existence in order for non-compliance with the condition to disqualify a modification from being an eligible facilities request.[123] Even so, like any other condition under section 1.6100(b)(7)(vi), such an aesthetics-related

[121] T-Mobile Comments at 18-19; *see also* WIA Reply at 24-25.

[122] T-Mobile Comments at 9-10; *see also* Nokia Comments at 6-7; Crown Castle August 2018 *Ex Parte* Letter at 16 (claiming that a California locality treats the dimensions of "every aspect" of a project as a concealment element); WIA Petition for Decl. Ruling at 11 (stating that a city in California does not allow weatherproof enclosure expansions greater than 36 inches). Additionally, WIA offers examples of localities that take the position that any increase in height on a monopine, even if below the substantial change threshold of section 1.16100(b)(7)(i)-(iv), defeats concealment and therefore constitutes a substantial change. WIA Petition for Decl. Ruling at 10.

[123] Several localities argue that this clarification would place a requirement on a locality to show express evidence that a feature was required and that the locality conditioned approval on its continuing existence, in order for non-compliance with the condition to disqualify a modification from being an eligible facilities request. *See, e.g.*, Lakewood *Ex Parte* Letter at 2; Greenbelt *Ex Parte* Letter at 2; NATOA June 2, 2020 *Ex Parte* Letter at 4. Our clarification is a restatement of the basic principle that applicants should have clear notice of what is required by a condition and how long the requirement lasts. We clarify that in order for a locality to disqualify a modification as an eligible facilities request based on an applicant's noncompliance with a condition of the original approval, the locality must show that the condition existed at the time of the original approval. Such showing would demonstrate that the applicant was on notice that noncompliance with the condition could result in disqualification .

condition still cannot be used to prevent modifications specifically allowed under section 1.6100(b)(7)(i)-(iv) of our rules.[124] Consistent with "commonplace [] statutory construction that the specific governs the general," we clarify that where there is a conflict between a locality's general ability to impose conditions under (vi) and modifications specifically deemed not substantial under (i)-(iv), the conditions under (vi) should be enforced only to the extent that they do not prevent the modification in (i)-(iv).[125] In other words, when a proposed modification otherwise permissible under section 1.6100(b)(7)(i)-(iv) cannot reasonably comply with conditions under section 1.6100(b)(7)(vi), the conflict should be resolved in favor of permitting the modifications. For example, a local government's condition of approval that requires a specifically sized shroud around an antenna could limit an increase in antenna size that is otherwise permissible under section 1.6100(b)(7)(i). Under section 1.6100(b)(7)(vi), however, the size limit of the shroud would not be enforceable if it purported to prevent a modification to add a larger antenna, but a local government could enforce its shrouding condition if the provider reasonably could install a larger shroud to cover the larger antenna and thus meet the purpose of the condition.

43. By providing guidance on the relationship between section 1.6100(b)(7)(i)-(iv) and 1.6100(b)(7)(vi), including the limitations on conditions that a locality may impose, we expect there to be fewer cases where conditions, especially aesthetic conditions, are improperly used to prevent modifications otherwise expressly allowed under section 1.6100(b)(7)(i)-(iv).[126] We reaffirm that beyond the specific conditions that localities may impose through section 1.6100(b)(7)(vi), localities can enforce "generally applicable building, structural, electrical, and safety codes" and "other laws codifying objective standards reasonably related to health and safety."[127]

44. *Examples of Aesthetics Related Conditions*. Petitioners and both industry and locality commenters have provided numerous examples of disputes involving modifications to wireless facilities. Using examples from the record,[128] and assuming that the locality has previously imposed an aesthetic-related condition under section 1.6100(b)(7)(vi), we offer examples to provide guidance on the validity of the condition to decrease future disputes and to help inform resolution of disputes should they arise:

- If a city has an aesthetic-related condition that specified a three-foot shroud cover for a three-foot antenna, the city could not prevent the replacement of the original antenna with a four-foot antenna otherwise permissible under section 1.6100(b)(7)(i) because the new antenna cannot fit in the shroud. As described above, if there was express evidence that the shroud was a condition of approval, the city could enforce its shrouding condition if the provider reasonably could install a four-foot shroud to cover the new four-foot antenna. The city also could enforce a shrouding requirement that is not size-specific and that does not limit modifications allowed under section 1.6100(b)(7)(i)-(iv).
- T-Mobile claims that some localities consider existing walls and fences around non-camouflaged towers to be concealment elements that have been defeated if new

[124] *See, e.g.*, Crown Castle August 2018 *Ex Parte* Letter at 13 ("Imposing size-based 'concealment elements' is nothing more than an attempt to evade the specific, objective size criteria that the Commission adopted in the *2014 Infrastructure Order*."); *see also* AT&T Comments at 6-7 ("If such generic features as height, width, or equipment could be construed as concealment elements, the concealment exception would swallow the rule, nullifying the Section 6409(a) protections adopted by Congress."); T-Mobile Comments at 9; WIA Petition for Decl. Ruling at 10 ("[T]he record in this proceeding reflects that some jurisdictions are interpreting this language so broadly that the exception swallows the rule."); ATC Comments at 9.

[125] *Morales v. Trans World Airlines, Inc.*, 504 U.S. 374, 384 (1992).

[126] *See, e.g.*, *Douglas Cty. v. Crown Castle USA, Inc.*, 2020 WL 109208, Case No. 18-cv-03171 (D. Colo., Jan. 9, 2020).

[127] *2014 Infrastructure Order*, 29 FCC Rcd at 12951, para. 202.

[128] *See* San Diego Reply at 44-60 (pictures of multiple structures that commenters consider to be concealed).

equipment is visible over those walls or fences.[129] First, such conditions are not concealment elements; rather, they are considered aesthetic conditions under section 1.6100(b)(7)(vi). Such conditions may not prevent modifications specifically allowed by section 1.6100(b)(7)(i)-(iv). However, if there were express evidence that the wall or fence were conditions of approval to fully obscure the original equipment from view, the locality may require a provider to make reasonable efforts to extend the wall or fence to maintain the covering of the equipment.

- If an original siting approval specified that a tower must remain hidden behind a tree line, a proposed modification within the thresholds of section 1.6100(b)(7)(i)-(iv) that makes the tower visible above the tree line would be permitted under section 1.6100(b)(7)(vi), because the provider cannot reasonably replace a grove of mature trees with a grove of taller mature trees to maintain the absolute hiding of the tower. [130]
- In a similar vein, San Francisco has conditions to reduce the visual impact of a wireless facility, including that it must be set back from the roof at the front building wall.[131] San Francisco states that it will not approve a modification if the new equipment to be installed does not meet the set back requirement. Even if a proposed modification within the thresholds of section 1.6100(b)(7)(i)-(iv) exceeds the required set back, San Francisco could enforce its set back condition if the provider reasonably could take other steps to reduce the visual impact of the facility to meet the purpose of its condition.

F. Environmental Assessments After Execution of Memorandum of Agreement

45. The Commission's environmental rules implementing the National Environmental Policy Act categorically exclude all actions from environmental evaluations, including the preparation of an environmental assessment, except for defined actions associated with the construction of facilities that may significantly affect the environment.[132] Pursuant to section 1.1307(a) of the Commission's rules, applicants currently submit an environmental assessment for those facilities that fall within specific categories, including facilities that may affect historic properties protected under the National Historic Preservation Act.[133] Under our current process, an applicant submits an environmental assessment for

[129] Letter from Cathleen Massey, Vice-President of Regulatory Affairs, T-Mobile USA, Inc., to Marlene H. Dortch, Secretary, FCC, WT Docket No. 17-79, at 3-4 (filed Aug. 30, 2019) (T-Mobile 2019 Letter).

[130] We disagree with the argument of local authorities that this interpretation conflicts with how the Commission explained the *2014 Infrastructure Order* in a brief to the Fourth Circuit almost five years ago. Wilmington *Ex Parte* Letter at 2. In that brief, the Commission addressed the general question of whether previous reliance on a tree for concealment could be defeated by later installing an additional facility that rose above the tree line. *See* Brief for Respondents, *Montgomery County v. FCC*, Nos. 15-1240 et al. (4th Cir. filed July 20, 2015). The Commission's argument in that brief cannot be interpreted to make any *de minimis* increase above the tree line a substantial increase under the Commission's rule. Nor did it distinguish between the application of the concealment provisions of the rule to a "stealth" structure and the limitations in the rule applicable to aesthetic conditions. In any event, in light of extensive subsequent experience as documented in the record of this proceeding, we believe that the rule applicable to stealth facilities should be construed in each individual case to depend upon whether the design would be viewed as no longer effective in view of the modified facilities. *See also, e.g.*, *SNR Wireless LicenseCo, LLC v. FCC*, 868 F.3d 1021, 1037 (D.C. Cir. 2017) (staff level actions do not bind the agency as a whole); *Appalachian Power Co. v. Train*, 620 F.2d 1040, 1045-46 (4th Cir. 1980) (similar); *Malkan FM Associates v. FCC*, 935 F.2d 1313, 1319 (D.C. Cir. 1992) (similar).

[131] San Francisco Reply at 3.

[132] 47 CFR §§ 1.1306, 1.1307; *see also* 42 U.S.C. § 4321 *et seq.*

[133] 47 CFR § 1.1307(a).

facilities that may affect historic properties, even if the applicant has executed a memorandum of agreement[134] with affected parties to address those adverse effects.[135]

46. We clarify on our own motion that an environmental assessment is not needed when the FCC and applicants have entered into a memorandum of agreement to mitigate effects of a proposed undertaking on historic properties, consistent with section VII.D of the Wireless Facilities Nationwide Programmatic Agreement,[136] if the only basis for the preparation of an environmental assessment was the potential for significant effects on such properties. We expect this clarification should further streamline the environmental review process.

47. Section 1.1307(a)(4) of the Commission's rules requires an environmental assessment if a proposed communications facility may have a significant effect on a historic property.[137] The Commission adopted a process to identify potential effects on historic properties by codifying the Wireless Facilities Nationwide Programmatic Agreement as the means to comply with section 106 of the National Historic Preservation Act.[138] If adverse effects on historic properties are identified during this process, the Wireless Facilities Nationwide Programmatic Agreement requires that the applicant consult with the State Historic Preservation Officer and/or Tribal Historic Preservation Officer, and other interested parties to avoid, minimize, or mitigate the adverse effects.[139]

48. When such effects cannot be avoided, under the terms of the Wireless Facilities Nationwide Programmatic Agreement, the applicant, the State Historic Preservation Officer and/or Tribal Historic Preservation Officer, and other interested parties may proceed to negotiate a memorandum of agreement that the signatories agree fully mitigates all adverse effects. The agreement is then sent to Commission staff for review and signature.[140] Under current practice, even after a memorandum of agreement is executed, an applicant is still required to prepare an environmental assessment and file it with the Commission.[141] The Commission subsequently places the environmental assessment on public notice, and the public has 30 days to file comments/oppositions.[142] If the environmental assessment is determined to be sufficient and no comments or oppositions are filed, the Commission issues a Finding of No Significant Impact and allows an applicant to proceed with the project.[143]

49. In this *Declaratory Ruling* we clarify that an environmental assessment is unnecessary after an adverse effect on a historic property is mitigated by a memorandum of agreement.[144] Applicants

---

[134] A memorandum of agreement is a mechanism to address adverse effects on historic properties or Indian religious sites. *See* Wireless Facilities Nationwide Programmatic Agreement at § VII.D.

[135] FCC, Tower and Antenna Siting, National Historic Preservation Act, The Nationwide Programmatic Agreements, https://www.fcc.gov/wireless/bureau-divisions/competition-infrastructure-policy-division/tower-and-antenna-siting.

[136] Wireless Facilities Nationwide Programmatic Agreement, 47 CFR pt. 1, Appx. C. The Wireless Facilities Nationwide Programmatic Agreement was executed by the Advisory Council on Historic Preservation (ACHP), the National Conference on State Historic Preservation Officers, and the FCC.

[137] 47 CFR § 1.1307(a)(4).

[138] *See* Wireless Facilities Nationwide Programmatic Agreement, 47 CFR pt. 1, Appx. C.

[139] Wireless Facilities Nationwide Programmatic Agreement at § VII.D.1.

[140] *Id.* at § VII.D.4.

[141] FCC, *Tower and Antenna Siting, National Historic Preservation Act, The Nationwide Programmatic Agreements*, https://www.fcc.gov/wireless/bureau-divisions/competition-infrastructure-policy-division/tower-and-antenna-siting.

[142] FCC, *Tower and Antenna Siting, The National Environmental Policy Act, FCC's NEPA Process*, https://www.fcc.gov/wireless/bureau-divisions/competition-infrastructure-policy-division/tower-and-antenna-siting.

[143] *Id.*

[144] *See* Council on Environmental Quality, Executive Office of the President, and Advisory Council on Historic Preservation, NEPA and NHPA: A Handbook for Integrating NEPA and Section 106 at 11, 21 (2013)

(continued….)

already are required to consider alternatives to avoid adverse effects prior to executing a memorandum of agreement.[145] The executed agreement demonstrates that the applicant: has notified the public of the proposed undertaking; has consulted with the State Historic Preservation Officer and/or Tribal Historic Preservation Officers, and other interested parties to identify potentially affected historic properties; and has worked with such parties to agree on a plan to mitigate adverse effects.[146] This mitigation eliminates any significant adverse effects on a historic property, and each memorandum of agreement must include as a standard provision that the memorandum of agreement "shall constitute full, complete, and adequate mitigation under the NHPA . . . and the FCC's rules."[147]

50. We note that section 1.1307(a) requires an applicant to submit an environmental assessment if a facility "may significantly affect the environment," which includes facilities that may affect historic properties, endangered species, or critical habitats.[148] As a result of the mitigation required by a memorandum of agreement, we conclude that any effects on historic properties remaining after the agreement is executed would be below the threshold of "significance" to trigger an environmental assessment.[149] After the memorandum of agreement is executed, a proposed facility should no longer "have adverse effects on identified historic properties" within the meaning of section 1.1307(a)(4)[150] and, therefore, should no longer be within the "types of facilities that may significantly affect the environment."[151] If none of the other criteria for requiring an environmental assessment in section 1.1307(a) exist, then such facilities automatically fall into the broad category of actions that the Commission has already found to "have no significant effect on the quality of the human environment and are categorically excluded from environmental processing."[152] The Commission's rules should be read in light of the scope of our obligation under section 106 and the ACHP's rules, which explicitly state that such a memorandum of agreement "evidences the agency official's compliance with section 106."[153] We

(Continued from previous page)
https://ceq.doe.gov/docs/ceq-publications/NEPA_NHPA_Section_106_Handbook_Mar2013.pdf (2013 NHPA/NEPA Handbook).

[145] Standard language in the template of the FCC's memoranda of agreement provides that the applicant, "consistent with the FCC's environmental rules has considered and evaluated a number of alternatives for the project and concluded that these options are either unavailable . . . or do not meet the technical requirements necessary to satisfy the coverage needs of the telecommunications system to be supported by the antennas." FCC, *Tower and Antenna Siting, The Nationwide Programmatic Agreements*, https://www.fcc.gov/wireless/bureau-divisions/competition-infrastructure-policy-division/tower-and-antenna-siting.

[146] Wireless Facilities Nationwide Programmatic Agreement at §§ IV, V, VI, VII.

[147] This provision is standard language in the FCC's memoranda of agreement, and it is included in the template located on the Commission's website. *See* FCC, *Tower and Antenna Siting, National Historic Preservation Act, The Nationwide Programmatic Agreements*, https://www.fcc.gov/wireless/bureau-divisions/competition-infrastructure-policy-division/tower-and-antenna-siting.

[148] 47 CFR § 1.1307(a).

[149] *Id.*

[150] *Id.* § 1.1307(a)(4).

[151] *Id.* § 1.1307(a) (introductory paragraph).

[152] *Id.* § 1.1306(a); 2013 NHPA/NEPA Handbook at 21 ("New facilities and collocations that do not affect historic properties may be categorically excluded from NEPA."). We note that nothing in this *Declaratory Ruling* changes the scope or application of section 1.1307(c), which allows any person to submit a petition seeking an environmental assessment for any communications facility deployment otherwise categorically excluded, and (d), which allows a Bureau to require an applicant to submit an environmental assessment even if a proposed deployment would be otherwise categorically excluded. 47 CFR § 1.1307(c) and (d).

[153] 36 CFR § 800.6(b)-(c); *see also* 54 U.S.C. § 300101 *et seq.*

remind applicants that an environmental assessment is still required if the proposed project may significantly affect the environment in ways unrelated to historic properties.[154]

IV. NOTICE OF PROPOSED RULEMAKING

51. Section 1.6100(b)(7)(iv) provides that "[a] modification substantially changes the physical dimensions of an eligible support structure if . . . [i]t entails any excavation or deployment outside the current site[.]"[155] In other words, a proposed modification that entails any excavation or deployment outside the current site of a tower or base station is not eligible for section 6409(a)'s streamlined procedures. Section 1.6100(b)(6) defines "site" for towers outside of the public rights-of-way as "the current boundaries of the leased or owned property surrounding the tower and any access or utility easements currently related to the site, and, for other eligible support structures, further restricted to that area in proximity to the structure and to other transmission equipment already deployed on the ground."[156]

52. In its Petition for Declaratory Ruling, WIA requests that the Commission clarify that "current site," for purposes of section 1.6100(b)(7)(iv), is the *currently* leased or owned compound area.[157] Industry commenters argue that current "site" means the property leased or owned by the applicant at the time it submits an application to make a qualifying modification under section 6409(a).[158] Industry commenters state that their proposed clarification merely affirms the plain meaning of the rule.[159] They assert that such clarification is needed because many local governments interpret section 1.6100(b)(6) as referring to the original site and wrongly claim that a modification is not entitled to section 6409(a) if it entails any deployment outside of those original boundaries.[160]

53. WIA's Petition for Rulemaking also requests that the Commission amend its rules to establish that a modification would not cause a "substantial change" if it entails excavation or facility deployments at locations of up to 30 feet in any direction outside the boundaries of a macro tower compound.[161] Industry commenters contend that it is often difficult to collocate transmission equipment on existing macro towers without expanding the compounds surrounding those towers in order to deploy additional equipment sheds or cabinets on the ground.[162] They argue that such deployments are becoming increasingly necessary to house multiple carriers' facilities on towers built in the past to support the needs of a single carrier and to facilitate the extensive network densification needed for rapid 5G deployment.[163] WIA states that this proposal is consistent with the Wireless Facilities Nationwide Programmatic Agreement,[164] which excludes from section 106 historic preservation review "the construction of a

---

[154] 47 CFR § 1.1307(a)(1)-(3), (6)-(8); *see also* note to section 1.1307(d) (requiring environmental assessment filings for certain proposed facilities that may affect migratory birds); Wilmington *Ex Parte* Letter at 23-24 (stating that if the Commission is going to eliminate the requirement for an environmental assessment addressing effects on historic properties when a memorandum of agreement is executed, it should clarify that it must still fully consider the potential for other environmental effects).

[155] 47 CFR § 1.6100(b)(7)(iv).

[156] *Id.* § 1.6100(b)(6).

[157] WIA Petition for Decl. Ruling at 9-11.

[158] *See, e.g.*, *id.* at 18; CTIA Comments at 11; AT&T Comments at 9; Crown Castle Comments at 18.

[159] AT&T Comments at 19; Crown Castle at 18; CTIA Comments at 11; WIA Comments at 11.

[160] *See* AT&T Comments at 19; American Tower Comments at 19; Crown Castle Comments at 28.

[161] WIA Petition for Rulemaking at 3-11.

[162] ATC Comments at 5-8; Crown Castle Comments at 31-32; CTIA Comments at 15-16; WIA Comments at 7.

[163] WIA Petition for Rulemaking at 7; ATC Comments at 7-8; AT&T Comments at 29; Crown Castle Comments at 31; CTIA Comments at 15-16; WIA Comments at 6-7; WISPA Comments at 8.

[164] WIA Petition for Decl. Ruling at 10.

replacement for any existing communications tower" that, *inter alia*, "does not expand the boundaries of the leased or owned property surrounding the tower by more than 30 feet in any direction or involve excavation outside these expanded boundaries or outside any existing access or utility easement related to the site."[165]

54. Local governments argue that the definition of "site" should not be interpreted to mean the applicant's leased or owned property on the date it submits its eligible facilities request.[166] They assert that this interpretation would permit providers to expand the boundaries of a site without review and approval by a local government by entering into leases that increase the area of a site after the locality's initial review.[167] NLC argues that it would lead to "extensive bypassing of local review for property uses not previously reviewed and approved to support wireless equipment."[168] Localities also generally oppose the compound expansion proposal because they argue that excavation of up to 30 feet beyond a tower's current site cannot be considered insubstantial.[169] Moreover, several cities argue that the Commission considered and rejected this proposal in the *2014 Infrastructure Order* and that circumstances have not changed that would warrant a policy reversal.[170]

55. In light of the different approaches recommended by the industry and localities, we seek comment on whether we should revise our rules to resolve these issues and, if so, in what manner. In particular, we propose to revise the definition of "site" in section 1.6100(b)(6) to make clear that "site" refers to the boundary of the leased or owned property surrounding the tower and any access or utility easements currently related to the site as of the date that the facility was last reviewed and approved by a locality. We further propose to amend section 1.6100(b)(7)(iv) so that modification of an existing facility that entails ground excavation or deployment of up to 30 feet in any direction outside the facility's site will be eligible for streamlined processing under section 6409(a).

56. Alternatively, we seek comment on whether we should revise the definition of site in section 1.6100(b)(6), as proposed above, without making the proposed change to section 1.6100(b)(7)(iv) for excavation or deployment of up to 30 feet outside the site. As another option, we seek comment on whether to define site in section 1.6100(b)(6) as the boundary of the leased or owned property surrounding the tower and any access or utility easements related to the site *as of the date an applicant submits a modification request*. Commenters should describe the costs and benefits of these approaches, as well as any other alternatives that they discuss in comments, and provide quantitative estimates as appropriate.

V. PROCEDURAL MATTERS

57. *Comment Filing Procedures.* Pursuant to sections 1.415 and 1.419 of the Commission's rules, 47 CFR §§ 1.415, 1.419, interested parties may file comments and reply comments on or before the dates indicated on the first page of this document. Comments may be filed using the Commission's Electronic Comment Filing System (ECFS). *See Electronic Filing of Documents in Rulemaking Proceedings*, 63 FR 24121 (1998).

- Electronic Filers: Comments may be filed electronically using the Internet by accessing the ECFS: http://apps.fcc.gov/ecfs/.

[165] Wireless Facilities Nationwide Programmatic Agreement at § III.B.

[166] NLC Comments at 10-12; NATOA Comments at 11-12.

[167] NLC Comments at 10-12; NATOA Comments at 11-12.

[168] NLC Comments at 10-12; *see also* NATOA Comments at 11.

[169] San Diego Comments at 53; NLC Comments at 4-5, 10-12; NATOA Comments at 14-15.

[170] San Diego Comments at 49-53.

- Paper Filers: Parties who choose to file by paper must file an original and one copy of each filing.
- Filings can be sent by commercial overnight courier, or by first-class or overnight U.S. Postal Service mail. All filings must be addressed to the Commission's Secretary, Office of the Secretary, Federal Communications Commission.
- Commercial overnight mail (other than U.S. Postal Service Express Mail and Priority Mail) must be sent to 9050 Junction Drive, Annapolis Junction, MD 20701. U.S. Postal Service first-class, Express, and Priority mail must be addressed to 445 12th Street, SW, Washington DC 20554.
- Effective March 19, 2020, and until further notice, the Commission no longer accepts any hand or messenger delivered filings. This is a temporary measure taken to help protect the health and safety of individuals, and to mitigate the transmission of COVID-19. See FCC Announces Closure of FCC Headquarters Open Window and Change in Hand-Delivery Policy, Public Notice, DA 20-304 (March 19, 2020). https://www.fcc.gov/document/fcc-closes-headquarters-open-window-and-changes-hand-delivery-policy.
- During the time the Commission's building is closed to the general public and until further notice, if more than one docket or rulemaking number appears in the caption of a proceeding, paper filers need not submit two additional copies for each additional docket or rulemaking number; an original and one copy are sufficient.

58. *People with Disabilities.* To request materials in accessible formats for people with disabilities (braille, large print, electronic files, audio format), send an e-mail to fcc504@fcc.gov or call the Consumer & Governmental Affairs Bureau at 202-418-0530 (voice), 202-418-0432 (tty).

59. *Ex Parte Rules—Permit-But-Disclose.* This proceeding shall be treated as a "permit-but-disclose" proceeding in accordance with the Commission's *ex parte* rules.[171] Persons making *ex parte* presentations must file a copy of any written presentation or a memorandum summarizing any oral presentation within two business days after the presentation (unless a different deadline applicable to the Sunshine period applies). Persons making oral *ex parte* presentations are reminded that memoranda summarizing the presentation must (1) list all persons attending or otherwise participating in the meeting at which the *ex parte* presentation was made, and (2) summarize all data presented and arguments made during the presentation. If the presentation consisted in whole or in part of the presentation of data or arguments already reflected in the presenter's written comments, memoranda or other filings in the proceeding, the presenter may provide citations to such data or arguments in his or her prior comments, memoranda, or other filings (specifying the relevant page and/or paragraph numbers where such data or arguments can be found) in lieu of summarizing them in the memorandum. Documents shown or given to Commission staff during *ex parte* meetings are deemed to be written *ex parte* presentations and must be filed consistent with Rule 1.1206(b). In proceedings governed by Rule 1.49(f) or for which the Commission has made available a method of electronic filing, written *ex parte* presentations and memoranda summarizing oral *ex parte* presentations, and all attachments thereto, must be filed through the electronic comment filing system available for that proceeding, and must be filed in their native format (*e.g.*, .doc, .xml, .ppt, searchable .pdf). Participants in this proceeding should familiarize themselves with the Commission's *ex parte* rules.

60. *Initial Regulatory Flexibility Analysis.* As required by the Regulatory Flexibility Act of 1980, as amended (RFA),[172] the Commission has prepared an Initial Regulatory Flexibility Analysis

[171] 47 CFR § 1.1200 *et seq.*

[172] *See* 5 U.S.C. § 603.

(IRFA) of the possible significant economic impact on small entities of the policies and actions addressed in the *Notice of Proposed Rulemaking*. The IRFA is set forth in Appendix B. Written public comments are requested on the IRFA. These comments must be filed in accordance with the same filing deadlines for comments on the *Notice of Proposed Rulemaking*, and should have a separate and distinct heading designating them as responses to the IRFA.

61. *Paperwork Reduction Act*. This *Declaratory Ruling and Notice of Proposed Rulemaking* does not contain proposed information collection(s) subject to the Paperwork Reduction Act of 1995 (PRA), Public Law 104-13. In addition, therefore, it does not contain any new or modified information collection burden for small business concerns with fewer than 25 employees, pursuant to the Small Business Paperwork Relief Act of 2002, Public Law 107-198, *see* 44 U.S.C. 3506(c)(4).

62. *Congressional Review Act*. The Commission has determined, and the Administrator of the Office of Information and Regulatory Affairs, Office of Management and Budget, concurs that this rule is "non-major" under the Congressional Review Act, 5 U.S.C. § 804(2). The Commission will send a copy of this *Declaratory Ruling and Notice of Proposed Rulemaking* to Congress and the Government Accountability Office pursuant to 5 U.S.C. § 801(a)(1)(A).

VI. ORDERING CLAUSES

63. Accordingly, IT IS ORDERED, pursuant to sections 1, 4(i)-(j), 7, 201, 253, 301, 303, 309, 319, and 332 of the Communications Act of 1934, as amended, and section 6409 of the Middle Class Tax Relief and Job Creation Act of 2012, as amended, 47 U.S.C. §§ 151, 154(i)-(j), 157, 201, 253, 301, 303, 309, 319, 332, 1455 that this *Declaratory Ruling* in WT Docket No. 19-250 and *Notice of Proposed Rulemaking* in RM-11849 IS hereby ADOPTED.

64. IT IS FURTHER ORDERED that this *Declaratory Ruling* SHALL BE effective upon release. It is our intention in adopting the foregoing *Declaratory Ruling* that, if any provision of the *Declaratory Ruling*, or the application thereof to any person or circumstance, is held to be unlawful, the remaining portions of such *Declaratory Ruling* not deemed unlawful, and the application of such *Declaratory Ruling* to other person or circumstances, shall remain in effect to the fullest extent permitted by law.

65. IT IS FURTHER ORDERED that, pursuant to 47 CFR § 1.4(b)(1), the period for filing petitions for reconsideration or petitions for judicial review of this *Declaratory Ruling* will commence on the date that this *Declaratory Ruling* is released.

66. IT IS FURTHER ORDERED that the Commission's Consumer & Governmental Affairs Bureau, Reference Information Center, SHALL SEND a copy of this *Declaratory Ruling and Notice of Proposed Rulemaking*, including the Initial Regulatory Flexibility Analysis, to the Chief Counsel for Advocacy of the Small Business Administration.

67. IT IS FURTHER ORDERED that this *Declaratory Ruling and Notice of Proposed Rulemaking* SHALL BE sent to Congress and the Government Accountability Office pursuant to the Congressional Review Act, *see* 5 U.S.C. § 801(a)(1)(A).

FEDERAL COMMUNICATIONS COMMISSION

Marlene H. Dortch
Secretary

APPENDIX A

Comments and Reply Comments

Comments

ACT—The App Association
Alamo Improvement Association
Ameren Service Company; American Electric Power Service Corporation; Duke Energy Corporation; Entergy Corporation; Oncor Electric Delivery Company LLC; Southern Company; Tampa Electric Company
American Tower Corporation
AT&T
Chevy Chase Village
City of Brea, California
City of Chino Hills
City of Coconut Creek
City of College Park
City of Costa Mesa
City of Frederick
City of Fort Bragg, California
City of Gaithersburg
City of Huntington Beach
City of Newport News, Virginia
City of New York
City of Ojai
City of San Diego, Cal.; City of Beaverton, Or.; City of Boulder, Colo.; Town of Breckenridge, Colo.; City of Carlsbad, Cal.; City Of Cerritos, Cal.; Colorado Communications And Utility Alliance; City Of Coronado, Cal.; Town Of Danville, Cal.; City of Encinitas, Cal.; City of Glendora, Cal.; King County, Wash.; City of Lacey, Wash.; City of La Mesa, Cal.; City of Lawndale, Cal.; League of Oregon Cities; League of California Cities; City of Napa, Cal.; City of Olympia, Wash.; City of Oxnard, Cal.; City of Pleasanton, Cal.; City of Rancho Palos Verdes, Cal.; City of Richmond, Cal.; Town of San Anselmo, Cal.; City of San Marcos, Cal.; City of San Ramon, Cal.; City of Santa Cruz, Cal.; City of Santa Monica, Cal.; City of Solana Beach, Cal.; City of South Lake Tahoe, Cal.; City of Tacoma, Wash.; City of Thousand Oaks, Cal.; Thurston County, Wash.; City of Tumwater, Wash. (San Diego)
City of Seattle
Communications Workers of America
Competitive Carriers Association
Consumer Technology Association
Crown Castle International Corp.
CTIA
East Bay Neighborhoods for Responsible Technology
ExteNet Systems, Inc.
Free State Foundation
Gwen Kennedy (on behalf of Loudon County, Virginia)
Margaret Phillips
Maryland Municipal League
Comments of The National Association of Telecommunications Officers and Advisors; The United States Conference of Mayors; and The National Association of Counties (NATOA)
National League of Cities; Clark County, Nevada; Cobb County, Georgia; Howard County, Maryland; Montgomery County, Maryland; The City of Ann Arbor, Michigan; The City of Arlington, Texas; The City of Bellevue, Washington; The City of Boston, Massachusetts; The City of Burlingame, California; The Town of Fairfax, California; The City of Gaithersburg, Maryland; The City of Greenbelt, Maryland; The Town of Hillsborough, California; The City of Kirkland,

Washington; The City of Lincoln, Nebraska; The City of Los Angeles, California; The City of Monterey, California; The City of Myrtle Beach, South Carolina; The City of New York, New York; The City of Omaha, Nebraska; The City of Portland, Oregon; The City of San Bruno, California; The Michigan Coalition to Protect Public Rights-Of-Way; The Texas Municipal League; and The Texas Coalition of Cities for Utility Issues (NLC)

Nokia

States of California and Nevada Chapter of the National Association of Telecommunications Officers and Advisors (SCAN NATOA, Inc.)

T-Mobile USA, Inc.

Town of Chesapeake Beach

Town of Kensington, Maryland

Verizon

WIA–The Wireless Infrastructure Association

Wireless Internet Service Providers Association

Reply Comments

American Tower Corporation

AT&T

City and County of San Francisco

City of San Diego, CA; City of Beaverton, Or.; City of Boulder, Colo.; Town of Breckenridge, Colo.; City of Carlsbad, Cal.; City of Cerritos, Cal.; Colorado Communications And Utility Alliance; City of Coronado, Cal.; Town of Danville, Cal.; City of Encinitas, Cal.; City of Glendora, Cal.; King County, Wash.; City of Lacey, Wash.; City of La Mesa, Cal.; City of Lawndale, Cal.; League of Oregon Cities; League of California Cities; City of Napa, Cal.; City of Olympia, Wash.; City of Oxnard, Cal.; City of Pleasanton, Cal.; City of Rancho Palos Verdes, Cal.; City of Richmond, Cal.; Town of San Anselmo, Cal.; City of San Marcos, Cal.; City of San Ramon, Cal.; City of Santa Cruz, Cal.; City of Santa Monica, Cal.; City of Solana Beach Cal.; City of South Lake Tahoe, Cal.; City of Tacoma, Wash.; City of Thousand Oaks, Cal.; Thurston County, Wash.; City of Tumwater, Wash. (San Diego)

Competitive Carriers Association

Consumer Technology Association

Crown Castle International Corp.

CTIA

ExteNet Systems, Inc.

National Association of Telecommunications Officers and Advisors; United States Conference of Mayors; National Association of Counties (NATOA *et. al.*)

National League of Cities; Clark County, NV; Cobb County, GA; Howard County, MD; Montgomery County, MD; City of Ann Arbor, MI; City of Arlington, TX; City of Baltimore, MD; City of Bellevue, WA; City of Boston, MA; City of Burien, WA; City of Burlingame, CA; City of Culver City, CA; Town of Fairfax, CA; City of Gaithersburg, MD; City of Greenbelt, MD; Town of Hillsborough, CA; City of Kirkland, WA; City of Lincoln, NE; City of Los Angeles, CA; City of Monterey, CA; City of Myrtle Beach, SC; City of New York, NY; City of Omaha, NE; City of Ontario, CA; City of Piedmont, CA; City of Portland, OR; City of San Bruno, CA; Michigan Coalition To Protect Public Rights-of-Way; Texas Municipal League; The Texas Coalition of Cities For Utility Issues (NLC *et. al.*)

Nina Beety

R Street Institute

The City of Frederick

T-Mobile USA, Inc.

Wireless Infrastructure Association (WIA)

APPENDIX B

Initial Regulatory Flexibility Analysis

1. As required by the Regulatory Flexibility Act of 1980, as amended (RFA),[1] the Commission has prepared an Initial Regulatory Flexibility Analysis (IRFA) of the possible significant economic impact on a substantial number of small entities of the policies and rules proposed in this Notice of Proposed Rulemaking (*Notice*). Written public comments are requested on this IRFA. Comments must be identified as responses to the IRFA and must be filed by the deadlines for comments provided on the first page of the *Notice*. The Commission will send a copy of the *Notice*, including this IRFA, to the Chief Counsel for Advocacy of the Small Business Administration (SBA).[2] In addition, the *Notice* and IRFA (or summaries thereof) will be published in the *Federal Register*.[3]

A. Need for, and Objectives of, the Proposed Rules

2. The *Notice* proposes to revise the definition of "site" in section 1.6100(b)(6) to make clear that "site" refers to the boundary of the leased or owned property surrounding the tower and any access or utility easements related to the site as of the date the facility was last reviewed and approved by a locality. It also proposes to amend section 1.6100(b)(7)(iv) to allow for streamlined procedures under the section 6409 of the Commission's rules to cover modifications to an existing facility that entail ground excavation or deployment of up to 30 feet in any direction outside the boundary of the site.

3. The *Notice* seeks comment on whether the Commission should revise the definition of "site" in section 1.6100(b)(6) without making the proposed change for excavation or deployment of up to 30 feet outside the boundary of the site. The Notice also seeks comment on an alternative definition—whether to define "site" in section 1.6100(b)(6) as the boundary of the leased or owned property surrounding the tower and any access or utility easements related to the site *as of the date an applicant submits a modification request*. Finally, the *Notice* asks commenters to describe the costs and benefits of each approach, as well as any other alternatives, and quantitative estimates as appropriate.

4. Section 1.6100(b)(7)(iv) of the Commission's rules provides that "a modification substantially changes the physical dimensions of an eligible support structure if . . . [i]t entails any excavation or deployment outside the current site[.]"[4] Accordingly, a proposed modification that entails any excavation outside the current site of a tower or base station is not eligible for streamlined approval by State or local governments under section 6409(a). Section 1.6100(b)(6) defines "site" for towers outside of the public rights-of-way as "the current boundaries of the leased or owned property surrounding the tower and any access or utility easements currently related to the site, and, for other eligible support structures, further restricted to that area in proximity to the structure and to other transmission equipment already deployed on the ground."[5]

5. Industry commenters argue that current "site" means the property leased or owned by the applicant at the time it submits an application to make a qualifying modification under section 6409(a).[6] Industry commenters state that their proposed clarification merely affirms the plain meaning of the rule.[7]

---

[1] *See* 5 U.S.C. § 603. The RFA, 5 U.S.C. §§ 601 – 612, has been amended by the Small Business Regulatory Enforcement Fairness Act of 1996 ("SBREFA"), Pub. L. No. 104-121, Title II, 110 Stat. 857 (1996).

[2] *See* 5 U.S.C. § 603(a).

[3] *See id.*

[4] 47 CFR § 1.6100(b)(7)(iv).

[5] 47 CFR § 1.6100(b)(6).

[6] *See e.g.,* WIA Petition for Decl. Ruling at 18; CTIA Comments at 11; AT&T Comments at 9; Crown Castle Comments at 18.

[7] AT&T Comments at 19; Crown Castle at 18; CTIA Comments at 11; WIA Comments at 11.

They state that such clarification is needed, because many local governments interpret section 1.6100(b)(6) as referring to the original site and wrongly claim that a modification is not entitled to section 6409(a) if it entails any deployment outside of those original boundaries.[8] Local governments oppose WIA's interpretation, saying it would permit providers to expand the boundaries of a site without review and approval by a local government by entering into leases that increase the area of a site after the locality's initial review.[9]

6. Section 1.6100(b)(7)(iv) provides that "a modification substantially changes the physical dimensions of an eligible support structure if . . . [i]t entails any excavation or deployment outside the current site[.]"[10] However "site" is defined, a proposed modification is not eligible for streamlined processing under section 6409(a) if it is on a tower outside a right-of-way and involves excavation outside the site.[11] WIA and other industry commenters urge the Commission to amend this rule so that "excavation or facility deployments at locations up to 30 feet in any direction outside the current boundaries of a macro tower compound" would not constitute a substantial change in the physical dimensions.[12]

7. Industry commenters contend that it is often difficult to collocate transmission equipment on existing macro towers without expanding the compounds surrounding those towers in order to deploy additional equipment sheds or cabinets on the ground.[13] They argue that such deployments are becoming increasingly necessary to house multiple carriers' facilities on towers built in the past to support the needs of a single carrier and to facilitate the extensive network densification needed for rapid 5G deployment.[14] In contrast, local governments generally oppose the compound expansion proposal arguing that excavation of up to a 30-feet beyond a tower's current site cannot be considered insubstantial.[15] Moreover, several cities argue that the Commission considered and rejected this proposal in the *2014 Infrastructure Order* and that circumstances have not changed that would warrant a policy reversal.[16]

B. Legal Basis

8. The proposed action is authorized pursuant to sections 1, 4(i)-(j), 7, 201, 253, 301, 303, 309, 319, and 332 of the Communications Act of 1934, as amended, and section 6409 of the Middle Class Tax Relief and Job Creation Act of 2012, as amended, 47 U.S.C. §§ 151, 154(i)-(j), 157, 201, 253, 301, 303, 309, 319, 332, 1455.

C. Description and Estimate of the Number of Small Entities to Which the Proposed Rules Will Apply

9. The RFA directs agencies to provide a description of, and where feasible, an estimate of the number of small entities that may be affected by the proposed rules and policies, if adopted.[17] The

---

[8] *See* AT&T Comments at 19; American Tower Comments at 19; Crown Castle Comments at 28.

[9] NLC Comments at 10-12; NATOA Comments at 11-12.

[10] 47 CFR § 1.6100(b)(7)(iv).

[11] *See* 47 CFR § 1.6100(b)(6)

[12] WIA Petition for Rulemaking at 9-11.

[13] American Tower Comments at 5-8; Crown Castle Comments at 31-32; CTIA Comments at 15-16; WIA Comments at 7.

[14] WIA Petition for Rulemaking at 7; American Tower Comments at 7-8; AT&T Comments at 29; Crown Castle Comments at 31; CTIA Comments at 15-16; WIA Comments at 6-7; WISPA Comments at 8.

[15] San Diego Comments at 53-53; NLC Comments at 4-5, 12-14; NATOA Comments at 14-15.

[16] *See e.g.*, San Diego Comments at 49-53.

[17] 5 U.S.C. § 603(b)(3).

RFA generally defines the term "small entity" as having the same meaning as the terms "small business," "small organization," and "small governmental jurisdiction."[18] In addition, the term "small business" has the same meaning as the term "small business concern" under the Small Business Act.[19] A "small business concern" is one which: (1) is independently owned and operated; (2) is not dominant in its field of operation; and (3) satisfies any additional criteria established by the SBA.[20]

10. *Small Businesses, Small Organizations, Small Governmental Jurisdictions.* Our actions, over time, may affect small entities that are not easily categorized at present. We therefore describe here, at the outset, three broad groups of small entities that could be directly affected herein.[21] First, while there are industry specific size standards for small businesses that are used in the regulatory flexibility analysis, according to data from the Small Business Administration's (SBA) Office of Advocacy, in general a small business is an independent business having fewer than 500 employees.[22] These types of small businesses represent 99.9% of all businesses in the United States, which translates to 30.7 million businesses.[23]

11. Next, the type of small entity described as a "small organization" is generally "any not-for-profit enterprise which is independently owned and operated and is not dominant in its field."[24] The Internal Revenue Service (IRS) uses a revenue benchmark of $50,000 or less to delineate its annual electronic filing requirements for small exempt organizations.[25] Nationwide, for tax year 2018, there were approximately 571,709 small exempt organizations in the U.S. reporting revenues of $50,000 or less according to the registration and tax data for exempt organizations available from the IRS.[26]

12. Finally, the small entity described as a "small governmental jurisdiction" is defined generally as "governments of cities, counties, towns, townships, villages, school districts, or special

---

[18] 5 U.S.C. § 601(6).

[19] 5 U.S.C. § 601(3) (incorporating by reference the definition of "small-business concern" in the Small Business Act, 15 U.S.C. § 632). Pursuant to 5 U.S.C. § 601(3), the statutory definition of a small business applies "unless an agency, after consultation with the Office of Advocacy of the Small Business Administration and after opportunity for public comment, establishes one or more definitions of such term which are appropriate to the activities of the agency and publishes such definition(s) in the Federal Register."

[20] 15 U.S.C. § 632.

[21] *See* 5 U.S.C. § 601(3)-(6).

[22] *See* SBA, Office of Advocacy, "What's New With Small Business?", https://cdn.advocacy.sba.gov/wp-content/uploads/2019/09/23172859/Whats-New-With-Small-Business-2019.pdf (Sept 2019).

[23] *Id*.

[24] 5 U.S.C. § 601(4).

[25] The IRS benchmark is similar to the population of less than 50,000 benchmark in 5 U.S.C § 601(5) that is used to define a small governmental jurisdiction. Therefore, the IRS benchmark has been used to estimate the number small organizations in this small entity description. S*ee* Annual Electronic Filing Requirement for Small Exempt Organizations — Form 990-N (e-Postcard), "Who must file," https://www.irs.gov/charities-non-profits/annual-electronic-filing-requirement-for-small-exempt-organizations-form-990-n-e-postcard. We note that the IRS data does not provide information on whether a small exempt organization is independently owned and operated or dominant in its field.

[26] *See* Exempt Organizations Business Master File Extract (EO BMF), "CSV Files by Region," https://www.irs.gov/charities-non-profits/exempt-organizations-business-master-file-extract-eo-bmf. The IRS Exempt Organization Business Master File (EO BMF) Extract provides information on all registered tax-exempt/non-profit organizations. The data utilized for purposes of this description was extracted from the IRS EO BMF data for Region 1-Northeast Area (76,886), Region 2-Mid-Atlantic and Great Lakes Areas (221,121), and Region 3-Gulf Coast and Pacific Coast Areas (273,702) which includes the continental U.S., Alaska, and Hawaii. This data does not include information for Puerto Rico.

districts, with a population of less than fifty thousand."[27] U.S. Census Bureau data from the 2017 Census of Governments[28] indicate that there were 90,075 local governmental jurisdictions consisting of general purpose governments and special purpose governments in the United States.[29] Of this number there were 36,931 general purpose governments (county[30], municipal and town or township[31]) with populations of less than 50,000 and 12,040 special purpose governments - independent school districts[32] with enrollment populations of less than 50,000.[33] Accordingly, based on the 2017 U.S. Census of Governments data, we estimate that at least 48,971 entities fall into the category of "small governmental jurisdictions."[34]

13. *Wireless Telecommunications Carriers (except Satellite).* This industry comprises establishments engaged in operating and maintaining switching and transmission facilities to provide communications via the airwaves. Establishments in this industry have spectrum licenses and provide services using that spectrum, such as cellular services, paging services, wireless internet access, and wireless video services.[35] The appropriate size standard under SBA rules is that such a business is small if it has 1,500 or fewer employees.[36] For this industry, U.S. Census Bureau data for 2012 show that there

[27] 5 U.S.C. § 601(5).

[28] *See* 13 U.S.C. § 161. The Census of Governments survey is conducted every five (5) years compiling data for years ending with "2" and "7". *See also* Census of Governments, https://www.census.gov/programs-surveys/cog/about.html.

[29] *See* U.S. Census Bureau, 2017 Census of Governments – Organization Table 2. Local Governments by Type and State: 2017 [CG1700ORG02]. https://www.census.gov/data/tables/2017/econ/gus/2017-governments.html. Local governmental jurisdictions are made up of general purpose governments (county, municipal and town or township) and special purpose governments (special districts and independent school districts). *See also* Table 2. CG1700ORG02 Table Notes_Local Governments by Type and State_2017.

[30] *See* U.S. Census Bureau, 2017 Census of Governments - Organization, Table 5. County Governments by Population-Size Group and State: 2017 [CG1700ORG05]. https://www.census.gov/data/tables/2017/econ/gus/2017-governments.html. There were 2,105 county governments with populations less than 50,000. This category does not include subcounty (municipal and township) governments.

[31] *See* U.S. Census Bureau, 2017 Census of Governments - Organization, Table 6. Subcounty General-Purpose Governments by Population-Size Group and State: 2017 [CG1700ORG06]. https://www.census.gov/data/tables/2017/econ/gus/2017-governments.html. There were 18,729 municipal and 16,097 town and township governments with populations less than 50,000.

[32] *See* U.S. Census Bureau, 2017 Census of Governments - Organization, Table 10. Elementary and Secondary School Systems by Enrollment-Size Group and State: 2017 [CG1700ORG10]. https://www.census.gov/data/tables/2017/econ/gus/2017-governments.html. There were 12,040 independent school districts with enrollment populations less than 50,000. *See also* Table 4. Special-Purpose Local Governments by State Census Years 1942 to 2017 [CG1700ORG04], CG1700ORG04 Table Notes_Special Purpose Local Governments by State_Census Years 1942 to 2017.

[33] While the special purpose governments category also includes local special district governments, the 2017 Census of Governments data does not provide data aggregated based on population size for the special purpose governments category. Therefore, only data from independent school districts is included in the special purpose governments category.

[34] This total is derived from the sum of the number of general purpose governments (county, municipal and town or township) with populations of less than 50,000 (36,931) and the number of special purpose governments - independent school districts with enrollment populations of less than 50,000 (12,040), from the 2017 Census of Governments - Organizations Tables 5, 6, and 10.

[35] *See* U.S. Census Bureau, *2017 NAICS Definition, "517312 Wireless Telecommunications Carriers (except Satellite)"*, https://www.census.gov/cgi-bin/sssd/naics/naicsrch?code=517312&search=2017%20NAICS%20Search.

[36] *See* 13 CFR § 121.201, NAICS Code 517312 (previously 517210).

were 967 firms that operated for the entire year.[37] Of this total, 955 firms employed fewer than 1,000 employees and 12 firms employed of 1000 employees or more.[38] Thus under this category and the associated size standard, the Commission estimates that the majority of Wireless Telecommunications Carriers (except Satellite) are small entities.

14. The Commission's own data—available in its Universal Licensing System—indicate that, as of August 31, 2018 there are 265 Cellular licensees that will be affected by our actions.[39] The Commission does not know how many of these licensees are small, as the Commission does not collect that information for these types of entities. Similarly, according to internally developed Commission data, 413 carriers reported that they were engaged in the provision of wireless telephony, including cellular service, Personal Communications Service (PCS), and Specialized Mobile Radio (SMR) Telephony services.[40] Of this total, an estimated 261 have 1,500 or fewer employees, and 152 have more than 1,500 employees.[41] Thus, using available data, we estimate that the majority of wireless firms can be considered small.

15. *All Other Telecommunications*. The "All Other Telecommunications" category is comprised of establishments primarily engaged in providing specialized telecommunications services, such as satellite tracking, communications telemetry, and radar station operation.[42] This industry also includes establishments primarily engaged in providing satellite terminal stations and associated facilities connected with one or more terrestrial systems and capable of transmitting telecommunications to, and receiving telecommunications from, satellite systems.[43] Establishments providing Internet services or voice over Internet protocol (VoIP) services via client-supplied telecommunications connections are also included in this industry.[44] The SBA has developed a small business size standard for "All Other Telecommunications", which consists of all such firms with annual receipts of $35 million or less.[45] For this category, U.S. Census Bureau data for 2012 show that there were 1,442 firms that operated for the entire year.[46] Of those firms, a total of 1,400 had annual receipts less than $25 million and 15 firms had

---

[37] *See* U.S. Census Bureau, *2012 Economic Census of the United States*, Table ID: EC1251SSSZ5, *Information: Subject Series: Estab and Firm Size: Employment Size of Firms for the U.S.: 2012*, NAICS Code 517210, https://data.census.gov/cedsci/table?text=EC1251SSSZ5&n=517210&tid=ECNSIZE2012.EC1251SSSZ5&hidePreview=false&vintage=2012.

[38] *Id*. Available U.S. Census Bureau data does not provide a more precise estimate of the number of firms that have employment of 1,500 or fewer employees. The largest category provided is for firms with "1000 employees or more."

[39] *See* http://wireless.fcc.gov/uls. For the purposes of this IRFA, consistent with Commission practice for wireless services, the Commission estimates the number of licensees based on the number of unique FCC Registration Numbers.

[40] *See* Federal Communications Commission, Wireline Competition Bureau, Industry Analysis and Technology Division, Trends in Telephone Service at Table 5.3 (Sept. 2010) (*Trends in Telephone Service*), https://apps.fcc.gov/edocs_public/attachmatch/DOC-301823A1.pdf.

[41] *See id*.

[42] *See* U.S. Census Bureau, *2017 NAICS Definition*, "*517919 All Other Telecommunications*", https://www.census.gov/cgi-bin/sssd/naics/naicsrch?input=517919&search=2017+NAICS+Search&search=2017.

[43] *Id.*

[44] *Id*.

[45] *See* 13 CFR § 121.201, NAICS Code 517919.

[46] *See* U.S. Census Bureau, *2012 Economic Census of the United States*, Table ID: EC1251SSSZ4, *Information: Subject Series - Estab and Firm Size: Receipts Size of Firms for the U.S.: 2012*, NAICS Code 517919, https://data.census.gov/cedsci/table?text=EC1251SSSZ4&n=517919&tid=ECNSIZE2012.EC1251SSSZ4&hidePreview=false.

annual receipts of $25 million to $49, 999,999.[47] Thus, the Commission estimates that the majority of "All Other Telecommunications" firms potentially affected by our action can be considered small.

16. *Fixed Microwave Services.* Microwave services include common carrier,[48] private-operational fixed,[49] and broadcast auxiliary radio services.[50] They also include the Upper Microwave Flexible Use Service[51], Millimeter Wave Service[52], Local Multipoint Distribution Service (LMDS),[53] the Digital Electronic Message Service (DEMS),[54] and the 24 GHz Service,[55] where licensees can choose between common carrier and non-common carrier status.[56] There are approximately 66,680 common carrier fixed licensees, 69,360 private and public safety operational-fixed licensees, 20,150 broadcast auxiliary radio licensees, 411 LMDS licenses, 33 24 GHz DEMS licenses, 777 39 GHz licenses, and five 24 GHz licenses, and 467 Millimeter Wave licenses in the microwave services.[57] The Commission has not yet defined a small business with respect to microwave services. The closest applicable SBA category is Wireless Telecommunications Carriers (except Satellite)[58] and the appropriate size standard for this category under SBA rules is that such a business is small if it has 1,500 or fewer employees.[59] For this industry, U.S. Census Bureau data for 2012 show that there were 967 firms that operated for the entire year.[60] Of this total, 955 firms had employment of 999 or fewer employees and 12 had employment of 1000 employees or more.[61] Thus under this SBA category and the associated size standard, the Commission estimates that a majority of fixed microwave service licensees can be considered small.

17. The Commission does not have data specifying the number of these licensees that have more than 1,500 employees, and thus is unable at this time to estimate with greater precision the number of fixed microwave service licensees that would qualify as small business concerns under the SBA's small business size standard. Consequently, the Commission estimates that there are up to 36,708

---

[47] *Id.*

[48] *See* 47 CFR Part 101, Subparts C and I.

[49] *See* 47 CFR Part 101, Subparts C and H.

[50] Auxiliary Microwave Service is governed by Part 74 of Title 47 of the Commission's Rules. *See* 47 CFR Part 74. Available to licensees of broadcast stations and to broadcast and cable network entities, broadcast auxiliary microwave stations are used for relaying broadcast television signals from the studio to the transmitter, or between two points such as a main studio and an auxiliary studio. The service also includes mobile TV pickups, which relay signals from a remote location back to the studio.

[51] *See* 47 CFR Part 30.

[52] *See* 47 CFR Part 101, Subpart Q.

[53] *See* 47 CFR Part 101, Subpart L.

[54] *See* 47 CFR Part 101, Subpart G.

[55] See id.

[56] *See* 47 CFR §§ 101.533, 101.1017.

[57] These statistics are based on a review of the Universal Licensing System on September 22, 2015.

[58] *See* U.S. Census Bureau, *2017 NAICS Definition, "517312 Wireless Telecommunications Carriers* (*except Satellite*)", https://www.census.gov/cgi-bin/sssd/naics/naicsrch?code=517312&search=2017%20NAICS%20Search.

[59] *See* 13 CFR § 121.201, NAICS Code 517312 (previously 517210).

[60] *See* U.S. Census Bureau, *2012 Economic Census of the United States*, Table ID: EC1251SSSZ5, *Information: Subject Series, Estab and Firm Size: Employment Size of Firms for the U.S.: 2012,* NAICS Code 517210, https://data.census.gov/cedsci/table?text=EC1251SSSZ5&n=517210&tid=ECNSIZE2012.EC1251SSSZ5&hidePreview=false&vintage=2012.

[61] *Id*. Available census data do not provide a more precise estimate of the number of firms that have employment of 1,500 or fewer employees. The largest category provided is for firms with "1000 employees or more."

common carrier fixed licensees and up to 59,291 private operational-fixed licensees and broadcast auxiliary radio licensees in the microwave services that may be small and may be affected by the rules and policies discussed herein. We note, however, that the microwave fixed licensee category includes some large entities.

18. *FM Translator Stations and Low Power FM Stations*. FM translators and Low Power FM Stations are classified in the category of Radio Stations and are assigned the same NAICs Code as licensees of radio stations.[62] This U.S. industry, Radio Stations, comprises establishments primarily engaged in broadcasting aural programs by radio to the public.[63] Programming may originate in their own studio, from an affiliated network, or from external sources.[64] The SBA has established a small business size standard which consists of all radio stations whose annual receipts are $41.5 million dollars or less.[65] U.S. Census Bureau data for 2012 indicate that 2,849 radio station firms operated during that year.[66] Of that number, 2,806 operated with annual receipts of less than $25 million per year, 17 with annual receipts between $25 million and $49,999,999 million and 26 with annual receipts of $50 million or more.[67] Therefore, based on the SBA's size standard we conclude that the majority of FM Translator Stations and Low Power FM Stations are small.

19. *Location and Monitoring Service (LMS)*. LMS systems use non-voice radio techniques to determine the location and status of mobile radio units. For purposes of auctioning LMS licenses, the Commission has defined a "small business" as an entity that, together with controlling interests and affiliates, has average annual gross revenues for the preceding three years not to exceed $15 million.[68] A "very small business" is defined as an entity that, together with controlling interests and affiliates, has average annual gross revenues for the preceding three years not to exceed $3 million.[69] These definitions have been approved by the SBA.[70] An auction for LMS licenses commenced on February 23, 1999 and closed on March 5, 1999. Of the 528 licenses auctioned, 289 licenses were sold to four small businesses.

20. *Multichannel Video Distribution and Data Service (MVDDS)*. MVDDS is a terrestrial fixed microwave service operating in the 12.2-12.7 GHz band. The Commission adopted criteria for defining three groups of small businesses for purposes of determining their eligibility for special provisions such as bidding credits. It defined a very small business as an entity with average annual gross revenues not exceeding $3 million for the preceding three years; a small business as an entity with average annual gross revenues not exceeding $15 million for the preceding three years; and an entrepreneur as an entity with average annual gross revenues not exceeding $40 million for the preceding

---

[62] *See* U.S. Census Bureau, *2017 NAICS Definition, "515112 Radio Stations"*, https://www.census.gov/cgi-bin/sssd/naics/naicsrch?input=515112&search=2017+NAICS+Search&search=2017.

[63] *Id.*

[64] *Id.*

[65] *See* 13 C.F.R. 121.201, NAICS Code 515112.

[66] *See* U.S. Census Bureau, *2012 Economic Census of the United States*, Table ID: EC1251SSSZ4, *Information: Subject Series – Estab and Firm Size: Receipts Size of Firms for the U.S.:2012*, NAICS Code 515112, https://data.census.gov/cedsci/table?text=EC1251SSSZ4&n=515112&tid=ECNSIZE2012.EC1251SSSZ4&hidePreview=false.

[67] *Id.*

[68] Amendment of Part 90 of the Commission's Rules to Adopt Regulations for Automatic Vehicle Monitoring Systems, PR Docket No. 93-61, *Second Report and Order*, 13 FCC Rcd 15182, 15192 para. 20 (1998); *see also* 47 CFR § 90.1103.

[69] *Id.*

[70] *See* Letter from Aida Alvarez, Administrator, Small Business Administration to Thomas J. Sugrue, Chief, Wireless Telecommunications Bureau, FCC (Feb. 22, 1999).

three years.[71] These definitions were approved by the SBA.[72] On January 27, 2004, the Commission completed an auction of 214 MVDDS licenses (Auction No. 53). In this auction, ten winning bidders won a total of 192 MVDDS licenses.[73] Eight of the ten winning bidders claimed small business status and won 144 of the licenses. The Commission also held an auction of MVDDS licenses on December 7, 2005 (Auction 63). Of the three winning bidders who won 22 licenses, two winning bidders, winning 21 of the licenses, claimed small business status.[74]

21. *Multiple Address Systems.* Entities using Multiple Address Systems (MAS) spectrum, in general, fall into two categories: (1) those using the spectrum for profit-based uses, and (2) those using the spectrum for private internal uses. With respect to the first category, Profit-based Spectrum use, the size standards established by the Commission define "small entity" for MAS licensees as an entity that has average annual gross revenues of less than $15 million over the three previous calendar years.[75] A "Very small business" is defined as an entity that, together with its affiliates, has average annual gross revenues of not more than $3 million over the preceding three calendar years.[76] The SBA has approved these definitions.[77] The majority of MAS operators are licensed in bands where the Commission has implemented a geographic area licensing approach that requires the use of competitive bidding procedures to resolve mutually exclusive applications.

22. The Commission's licensing database indicates that, as of April 16, 2010, there were a total of 11,653 site-based MAS station authorizations. Of these, 58 authorizations were associated with common carrier service. In addition, the Commission's licensing database indicates that, as of April 16, 2010, there were a total of 3,330 Economic Area market area MAS authorizations. The Commission's licensing database also indicates that, as of April 16, 2010, of the 11,653 total MAS station authorizations, 10,773 authorizations were for private radio service. In 2001, an auction for 5,104 MAS licenses in 176 EAs was conducted.[78] Seven winning bidders claimed status as small or very small businesses and won 611 licenses. In 2005, the Commission completed an auction (Auction 59) of 4,226 MAS licenses in the Fixed Microwave Services from the 928/959 and 932/941 MHz bands. Twenty-six winning bidders won a total of 2,323 licenses. Of the 26 winning bidders in this auction, five claimed small business status and won 1,891 licenses.

23. With respect to the second category, Internal Private Spectrum use consists of entities that use, or seek to use, MAS spectrum to accommodate their own internal communications needs, MAS

---

[71] Amendment of Parts 2 and 25 of the Commission's Rules to Permit Operation of NGSO FSS Systems Co-Frequency with GSO and Terrestrial Systems in the Ku-Band Frequency Range; Amendment of the Commission's Rules to Authorize Subsidiary Terrestrial Use of the 12.2–12.7 GHz Band by Direct Broadcast Satellite Licensees and their Affiliates; and Applications of Broadwave USA, PDC Broadband Corporation, and Satellite Receivers, Ltd. to Provide A Fixed Service in the 12.2–12.7 GHz Band, *Memorandum Opinion and Order and Second Report and Order*, 17 FCC Rcd 9614, 9711, para. 252 (2002).

[72] *See* Letter from Hector V. Barreto, Administrator, U.S. Small Business Administration, to Margaret W. Wiener, Chief, Auctions and Industry Analysis Division, Wireless Telecommunications Bureau, FCC (Feb. 13, 2002).

[73] *See* "*Multichannel Video Distribution and Data Service Spectrum Auction Closes; Winning Bidders Announced*," Public Notice, 19 FCC Rcd 1834 (2004).

[74] *See* "*Auction of Multichannel Video Distribution and Data Service Licenses Closes; Winning Bidders Announced for Auction No. 63*," Public Notice, 20 FCC Rcd 19807 (2005).

[75] *See* Amendment of the Commission's Rules Regarding Multiple Address Systems, *Report and Order*, 15 FCC Rcd 11956, 12008, para. 123 (2000).

[76] *Id*.

[77] *See* Letter from Aida Alvarez, Administrator, Small Business Administration, to Thomas Sugrue, Chief, Wireless Telecommunications Bureau, FCC (June 4, 1999).

[78] *See* "Multiple Address Systems Spectrum Auction Closes," Public Notice, 16 FCC Rcd 21011 (2001).

serves an essential role in a range of industrial, safety, business, and land transportation activities. MAS radios are used by companies of all sizes, operating in virtually all U.S. business categories, and by all types of public safety entities. For the majority of private internal users, the definition developed by the SBA would be more appropriate than the Commission's definition. The closest applicable definition of a small entity is the "Wireless Telecommunications Carriers (except Satellite)" definition under the SBA size standards.[79] The appropriate size standard under SBA rules is that such a business is small if it has 1,500 or fewer employees.[80] For this category, U.S. Census Bureau data for 2012 show that there were 967 firms that operated for the entire year.[81] Of this total, 955 firms had employment of 999 or fewer employees and 12 had employment of 1000 employees or more.[82] Thus under this category and the associated small business size standard, the Commission estimates that the majority of firms that may be affected by our action can be considered small.

24. *Non-Licensee Owners of Towers and Other Infrastructure*. Although at one time most communications towers were owned by the licensee using the tower to provide communications service, many towers are now owned by third-party businesses that do not provide communications services themselves but lease space on their towers to other companies that provide communications services. The Commission's rules require that any entity, including a non-licensee, proposing to construct a tower over 200 feet in height or within the glide slope of an airport must register the tower with the Commission's Antenna Structure Registration ("ASR") system and comply with applicable rules regarding review for impact on the environment and historic properties.

25. As of March 1, 2017, the ASR database includes approximately 122,157 registration records reflecting a "Constructed" status and 13,987 registration records reflecting a "Granted, Not Constructed" status. These figures include both towers registered to licensees and towers registered to non-licensee tower owners. The Commission does not keep information from which we can easily determine how many of these towers are registered to non-licensees or how many non-licensees have registered towers.[83] Regarding towers that do not require ASR registration, we do not collect information as to the number of such towers in use and therefore cannot estimate the number of tower owners that would be subject to the rules on which we seek comment. Moreover, the SBA has not developed a size standard for small businesses in the category "Tower Owners." Therefore, we are unable to determine the number of non-licensee tower owners that are small entities. We believe, however, that when all entities owning 10 or fewer towers and leasing space for collocation are included, non-licensee tower owners number in the thousands. In addition, there may be other non-licensee owners of other wireless infrastructure, including Distributed Antenna Systems (DAS) and small cells that might be affected by the measures on which we seek comment. We do not have any basis for estimating the number of such non-licensee owners that are small entities.

26. The closest applicable SBA category is All Other Telecommunications[84], and the appropriate size standard consists of all such firms with gross annual receipts of $38 million or less.[85] For

[79] *See* 13 CFR § 121.201, NAICS Code 517312 (formerly 517210).

[80] *Id*.

[81] *See* U.S. Census Bureau, *2012 Economic Census of the United States*, Table ID: EC1251SSSZ5, *Information: Subject Series: Estab and Firm Size: Employment Size of Firms for the U.S.: 2012,* NAICS Code 517210, https://data.census.gov/cedsci/table?text=EC1251SSSZ5&n=517210&tid=ECNSIZE2012.EC1251SSSZ5&hidePreview=false&vintage=2012.

[82] Available census data do not provide a more precise estimate of the number of firms that have employment of 1,500 or fewer employees. The largest category provided is for firms with "1000 employees or more."

[83] We note, however, that approximately 13,000 towers are registered to 10 cellular carriers with 1,000 or more employees.

[84] *See* U.S. Census Bureau, *2017 NAICS Definition*, "*517919 All Other Telecommunications*", https://www.census.gov/cgi-bin/sssd/naics/naicsrch?input=517919&search=2017+NAICS+Search&search=2017.

this category, U.S. Census Bureau data for 2012 show that there were 1,442 firms that operated for the entire year.[86] Of these firms, a total of 1,400 had gross annual receipts of less than $25 million and 15 firms had annual receipts of $25 million to $49, 999,999.[87] Thus, under this SBA size standard a majority of the firms potentially affected by our action can be considered small.

27. *Personal Radio Services.* Personal radio services provide short-range, low-power radio for personal communications, radio signaling, and business communications not provided for in other services. Personal radio services include services operating in spectrum licensed under Part 95 of our rules.[88] These services include Citizen Band Radio Service, General Mobile Radio Service, Radio Control Radio Service, Family Radio Service, Wireless Medical Telemetry Service, Medical Implant Communications Service, Low Power Radio Service, and Multi-Use Radio Service.[89] There are a variety of methods used to license the spectrum in these rule parts, from licensing by rule, to conditioning operation on successful completion of a required test, to site-based licensing, to geographic area licensing. All such entities in this category are wireless, therefore we apply the definition of Wireless Telecommunications Carriers (except Satellite)[90], pursuant to which the SBA's small entity size standard is defined as those entities employing 1,500 or fewer persons.[91] For this industry, U.S. Census Bureau data for 2012 show that there were 967 firms that operated for the entire year.[92] Of this total, 955 firms had employment of 999 or fewer employees and 12 had employment of 1000 employees or more.[93] Thus under this category and the associated size standard, the Commission estimates that the majority of firms can be considered small. We note however, that many of the licensees in this category are individuals and not small entities. In addition, due to the mostly unlicensed and shared nature of the spectrum utilized in many of these services, the Commission lacks direct information upon which to base an estimation of the number of small entities that may be affected by our actions in this proceeding.

28. *Private Land Mobile Radio Licensees*. Private land mobile radio (PLMR) systems serve an essential role in a vast range of industrial, business, land transportation, and public safety activities. Companies of all sizes operating in all U.S. business categories use these radios. Because of the vast array of PLMR users, the Commission has not developed a small business size standard specifically

(Continued from previous page)

[85] *See* 13 CFR § 121.201, NAICS Code 517919.

[86] *See* U.S. Census Bureau, *2012 Economic Census of the United States*, Table ID: EC1251SSSZ4, *Information: Subject Series - Estab and Firm Size: Receipts Size of Firms for the U.S.: 2012*, NAICS Code 517919, https://data.census.gov/cedsci/table?text=EC1251SSSZ4&n=517919&tid=ECNSIZE2012.EC1251SSSZ4&hidePreview=false.

[87] *Id*.

[88] 47 CFR Part 90.

[89] The Citizens Band Radio Service, General Mobile Radio Service, Radio Control Radio Service, Family Radio Service, Wireless Medical Telemetry Service, Medical Implant Communications Service, Low Power Radio Service, and Multi-Use Radio Service are governed by subpart D, subpart A, subpart C, subpart B, subpart H, subpart I, subpart G, and subpart J, respectively, of Part 95 of the Commission's rules. See generally 47 CFR Part 95.

[90] *See* U.S. Census Bureau, *2017 NAICS Definition, "517312 Wireless Telecommunications Carriers* (*except Satellite)"*, https://www.census.gov/cgi-bin/sssd/naics/naicsrch?code=517312&search=2017%20NAICS%20Search.

[91] *See* 13 CFR § 121.201, NAICS Code 517312 (previously 517210).

[92] *See* U.S. Census Bureau, *2012 Economic Census of the United States*, Table ID: EC1251SSSZ5, *Information: Subject Series: Estab and Firm Size: Employment Size of Firms for the U.S.: 2012,* NAICS Code 517210, https://data.census.gov/cedsci/table?text=EC1251SSSZ5&n=517210&tid=ECNSIZE2012.EC1251SSSZ5&hidePreview=false&vintage=2012.

[93] *Id*. Available census data do not provide a more precise estimate of the number of firms that have employment of 1,500 or fewer employees. The largest category provided is for firms with "1000 employees or more."

applicable to PLMR users. The closest applicable SBA category is Wireless Telecommunications Carriers (except Satellite) which encompasses business entities engag*ed in radiotelephone communications.*[94] The appropriate size standard for this category under SBA rules is that such a business is small if it has 1,500 or fewer employees.[95] For this industry, U.S. Census Bureau data for 2012 show that there were 967 firms that operated for the entire year.[96] Of this total, 955 firms had employment of 999 or fewer employees and 12 had employment of 1000 employees or more.[97] Thus under this category and the associated size standard, the Commission estimates that the majority of PLMR Licensees are small entities.

29. According to the Commission's records, a total of approximately 400,622 licenses comprise PLMR users.[98] Of this number there are a total of approximately 3,174 PLMR licenses in the 4.9 GHz band;[99] 29,187 PLMR licenses in the 800 MHz band;[100] and 3,374 licenses in the frequencies range 173.225 MHz to 173.375 MHz.[101] The Commission does not require PLMR licensees to disclose information about number of employees, and does not have information that could be used to determine how many PLMR licensees constitute small entities under this definition. The Commission however believes that a substantial number of PLMR licensees may be small entities despite the lack of specific information.

30. *Public Safety Radio Licensees.* As a general matter, Public Safety Radio Pool licensees include police, fire, local government, forestry conservation, highway maintenance, and emergency medical services.[102] Because of the vast array of public safety licensees, the Commission has not

---

[94] *See* U.S. Census Bureau, *2017 NAICS Definition, "517312 Wireless Telecommunications Carriers (except Satellite)"*, https://www.census.gov/cgi-bin/sssd/naics/naicsrch?code=517312&search=2017%20NAICS%20Search.

[95] *See* 13 CFR § 121.201, NAICS Code 517312 (formerly 517210).

[96] *See* U.S. Census Bureau, *2012 Economic Census of the United States*, Table ID: EC1251SSSZ5, *Information: Subject Series: Estab and Firm Size: Employment Size of Firms for the U.S.: 2012,* NAICS Code 517210, https://data.census.gov/cedsci/table?text=EC1251SSSZ5&n=517210&tid=ECNSIZE2012.EC1251SSSZ5&hidePreview=false&vintage=2012.

[97] *Id*. Available U.S. Census Bureau data does not provide a more precise estimate of the number of firms that have employment of 1,500 or fewer employees. The largest category provided is for firms with "1000 employees or more."

[98] This figure was derived from Commission licensing records as of September 19, 2016. Licensing numbers change on a daily basis. This does not indicate the number of licensees, as licensees may hold multiple licenses. There is no information currently available about the number of PLMR licensees that have fewer than 1,500 employees.

[99] Based on an FCC Universal Licensing System search of January 26, 2018. Search parameters: Radio Service = PA – Public Safety 4940-4990 MHz Band; Authorization Type = Regular; Status = Active.

[100] Based on an FCC Universal Licensing System search of May 15, 2017. Search parameters: Radio Service = GB, GE, GF, GJ, GM, GO, GP, YB, YE, YF, YJ, YM, YO, YP, YX; Authorization Type = Regular; Status = Active.

[101] This figure was derived from Commission licensing records as of August 16, 2013. Licensing numbers change daily. We do not expect this number to be significantly smaller today. This does not indicate the number of licensees, as licensees may hold multiple licenses. There is no information currently available about the number of licensees that have fewer than 1,500 employees.

[102] *See* subparts A and B of Part 90 of the Commission's Rules, 47 C.F.R. §§ 90.1-90.22. Police licensees serve state, county, and municipal enforcement through telephony (voice), telegraphy (code), and teletype and facsimile (printed material). Fire licensees are comprised of private volunteer or professional fire companies, as well as units under governmental control. Public Safety Radio Pool licensees also include state, county, or municipal entities that use radio for official purposes. State departments of conservation and private forest organizations comprise forestry service licensees that set up communications networks among fire lookout towers and ground crews. State and local governments are highway maintenance licensees that provide emergency and routine communications to aid other

(continued….)

developed a small business size standard specifically applicable to public safety licensees. The closest applicable SBA category is Wireless Telecommunications Carriers (except Satellite) which encompasses business entities engaged in radiotelephone communications.[103] The appropriate size standard for this category under SBA rules is that such a business is small if it has 1,500 or fewer employees.[104] For this industry, U.S. Census data for 2012 show that there were 967 firms that operated for the entire year.[105] Of this total, 955 firms had employment of 999 or fewer employees and 12 had employment of 1000 employees or more.[106] Thus under this category and the associated size standard, the Commission estimates that the majority of firms can be considered small. With respect to local governments, in particular, since many governmental entities comprise the licensees for these services, we include under public safety services the number of government entities affected. According to Commission records, there are a total of approximately 133,870 licenses within these services.[107] There are 3.121 licenses in the 4.9 GHz band, based on an FCC Universal Licensing System search of March 29, 2017.[108] We estimate that fewer than 2,442 public safety radio licensees hold these licenses because certain entities may have multiple licenses.

31. *Radio Stations*. This Economic Census category "comprises establishments primarily engaged in broadcasting aural programs by radio to the public. Programming may originate in their own studio, from an affiliated network, or from external sources."[109] The SBA has established a small business size standard for this category as firms having $41.5 million or less in annual receipts.[110] U.S. Census Bureau data for 2012 show that 2,849 radio station firms operated during that year.[111] Of that

(Continued from previous page)
public safety services to keep main roads safe for vehicular traffic. Emergency medical licensees use these channels for emergency medical service communications related to the delivery of emergency medical treatment. Additional licensees include medical services, rescue organizations, veterinarians, persons with disabilities, disaster relief organizations, school buses, beach patrols, establishments in isolated areas, communications standby facilities, and emergency repair of public communications facilities.

[103] *See* U.S. Census Bureau, *2017 NAICS Definition, "517312 Wireless Telecommunications Carriers (except Satellite)"*, https://www.census.gov/cgi-bin/sssd/naics/naicsrch?code=517312&search=2017%20NAICS%20Search.

[104] *See* 13 CFR § 121.201, NAICS Code 517312 (formerly 517210).

[105] *See* U.S. Census Bureau, *2012 Economic Census of the United States*, Table ID: EC1251SSSZ5, *Information: Subject Series: Estab and Firm Size: Employment Size of Firms for the U.S.: 2012,* NAICS Code 517210, https://data.census.gov/cedsci/table?text=EC1251SSSZ5&n=517210&tid=ECNSIZE2012.EC1251SSSZ5&hidePreview=false&vintage=2012.

[106] *Id*. Available U.S. Census Bureau data does not provide a more precise estimate of the number of firms that have employment of 1,500 or fewer employees. The largest category provided is for firms with "1000 employees or more."

[107] This figure was derived from Commission licensing records as of June 27, 2008. Licensing numbers change on a daily basis. We do not expect this number to be significantly smaller today. This does not indicate the number of licensees, as licensees may hold multiple licenses. There is no information currently available about the number of public safety licensees that have less than 1,500 employees.

[108] Based on an FCC Universal Licensing System search of March 29, 2017. Search parameters: Radio Service = PA – Public Safety 4940-4990 MHz Band; Authorization Type = Regular; Status = Active.

[109] *See* U.S. Census Bureau, *2017 NAICS Definition, "515112 Radio Stations*," https://www.census.gov/cgi-bin/sssd/naics/naicsrch?input=515112&search=2017+NAICS+Search&search=2017.

[110] *See* 13 CFR § 121.201, NAICS Code 515112.

[111] *See* U.S. Census Bureau, *2012 Economic Census of the United States*, Table ID: EC1251SSSZ4, *Information: Subject Series – Estab and Firm Size: Receipts Size of Firms for the U.S.: 2012,* NAICS Code 515112, https://data.census.gov/cedsci/table?text=EC1251SSSZ4&n=515112&tid=ECNSIZE2012.EC1251SSSZ4&hidePreview=false.

number, 2,806 firms operated with annual receipts of less than $25 million per year and 17 with annual receipts between $25 million and $49,999,999 million.[112] Therefore, based on the SBA's size standard the majority of such entities are small entities.

32. According to Commission staff review of the BIA/Kelsey, LLC's Media Access Pro Radio Database as of January 2018, about 11,261 (or about 99.9 percent) of 11,383 commercial radio stations had revenues of $38.5 million or less and thus qualify as small entities under the SBA definition.[113] The Commission has estimated the number of licensed commercial AM radio stations to be 4,580 stations and the number of commercial FM radio stations to be 6,726, for a total number of 11,306.[114] We note the Commission has also estimated the number of licensed noncommercial (NCE) FM radio stations to be 4,172.[115] Nevertheless, the Commission does not compile and otherwise does not have access to information on the revenue of NCE stations that would permit it to determine how many such stations would qualify as small entities.

33. We also note, that in assessing whether a business entity qualifies as small under the above definition, business control affiliations must be included.[116] The Commission's estimate therefore likely overstates the number of small entities that might be affected by its action, because the revenue figure on which it is based does not include or aggregate revenues from affiliated companies. In addition, to be determined a "small business," an entity may not be dominant in its field of operation.[117] We further note, that it is difficult at times to assess these criteria in the context of media entities, and the estimate of small businesses to which these rules may apply does not exclude any radio station from the definition of a small business on these basis, thus our estimate of small businesses may therefore be over-inclusive. Also, as noted above, an additional element of the definition of "small business" is that the entity must be independently owned and operated. The Commission notes that it is difficult at times to assess these criteria in the context of media entities and the estimates of small businesses to which they apply may be over-inclusive to this extent.

34. *Satellite Telecommunications.* This category comprises firms "primarily engaged in providing telecommunications services to other establishments in the telecommunications and broadcasting industries by forwarding and receiving communications signals via a system of satellites or reselling satellite telecommunications."[118] Satellite telecommunications service providers include satellite and earth station operators. The category has a small business size standard of $35 million or less in average annual receipts, under SBA rules.[119] For this category, U.S. Census Bureau data for 2012 show that there were a total of 333 firms that operated for the entire year.[120] Of this total, 299 firms had annual

---

[112] *Id.*

[113] BIA/Kelsey, MEDIA Access Pro Database (viewed Jan. 26, 2018).

[114] Broadcast Station Totals as of March 31, 2020, Press Release (MB April 6, 2020) (March 31, 2020 Broadcast Station Totals), https://docs.fcc.gov/public/attachments/DOC-363515A1.pdf.

[115] *Id.*

[116] "[Business concerns] are affiliates of each other when one concern controls or has the power to control the other, or a third party or parties controls or has power to control both." 13 C.F.R. § 121.103(a)(1).

[117] 13 C.F.R. § 121.102(b).

[118] *See* U.S. Census Bureau, *2017 NAICS Definition, "517410 Satellite Telecommunications",* https://www.census.gov/cgi-bin/sssd/naics/naicsrch?input=517410&search=2017+NAICS+Search&search=2017.

[119] *See* 13 CFR § 121.201, NAICS Code 517410.

[120] *See* U.S. Census Bureau, *2012 Economic Census of the United States*, Table ID: EC1251SSSZ4, *Information: Subject Series - Estab and Firm Size: Receipts Size of Firms for the U.S.: 2012*, NAICS Code 517410, https://data.census.gov/cedsci/table?text=EC1251SSSZ4&n=517410&tid=ECNSIZE2012.EC1251SSSZ4&hidePreview=false&vintage=2012.

receipts of less than $25 million.[121] Consequently, we estimate that the majority of satellite telecommunications providers are small entities.

35. *Television Broadcasting.* This Economic Census category "comprises establishments primarily engaged in broadcasting images together with sound."[122] These establishments operate television broadcast studios and facilities for the programming and transmission of programs to the public.[123] These establishments also produce or transmit visual programming to affiliated broadcast television stations, which in turn broadcast the programs to the public on a predetermined schedule. Programming may originate in their own studio, from an affiliated network, or from external sources. The SBA has created the following small business size standard for such businesses: those having $41.5 million or less in annual receipts.[124] The 2012 Economic Census reports that 751 firms in this category operated in that year.[125] Of that number, 656 had annual receipts of $25,000,000 or less, and 25 had annual receipts between $25,000,000 and $49,999,999.[126] Based on this data we therefore estimate that the majority of commercial television broadcasters are small entities under the applicable SBA size standard.

36. The Commission has estimated the number of licensed commercial television stations to be 1,377.[127] Of this total, 1,258 stations (or about 91 percent) had revenues of $38.5 million or less, according to Commission staff review of the BIA Kelsey Inc. Media Access Pro Television Database (BIA) on November 16, 2017, and therefore these licensees qualify as small entities under the SBA definition. In addition, the Commission has estimated the number of licensed noncommercial educational television stations to be 384.[128] Notwithstanding, the Commission does not compile and otherwise does not have access to information on the revenue of NCE stations that would permit it to determine how many such stations would qualify as small entities. There are also 2,300 low power television stations, including Class A stations (LPTV) and 3,681 TV translator stations.[129] Given the nature of these services, we will presume that all of these entities qualify as small entities under the above SBA small business size standard.

37. We note, however, that in assessing whether a business concern qualifies as "small" under the above definition, business (control) affiliations[130] must be included. Our estimate, therefore likely overstates the number of small entities that might be affected by our action, because the revenue figure on which it is based does not include or aggregate revenues from affiliated companies. In addition,

---

[121] *Id*. The available U.S. Census Bureau data does not provide a more precise estimate of the number of firms that meet the SBA size standard of annual receipts of $35 million or less.

[122] *See* U.S. Census Bureau, *2017 NAICS Definition, "515120 Television Broadcasting*", https://www.census.gov/cgi-bin/sssd/naics/naicsrch?input=515120&search=2017+NAICS+Search&search=2017.

[123] *Id.*

[124] *See* 13 CFR § 121.201, NAICS Code 515120.

[125] *See* U.S. Census Bureau, *2012 Economic Census of the United States*, Table ID: EC1251SSSZ4, *Information: Subject Series – Estab and Firm Size: Receipts Size of Firms for the U.S.: 2012,* NAICS Code 515120, https://data.census.gov/cedsci/table?text=EC1251SSSZ4&n=515120&tid=ECNSIZE2012.EC1251SSSZ4&hidePreview=false.

[126] *Id*.

[127] *Broadcast Station Totals* as of June 30, 2018, Press Release (MB, rel. Jul. 3, 2018) (June 30, 2018 Broadcast Station Totals Press Release), https://docs.fcc.gov/public/attachments/DOC-352168A1.pdf.

[128] *Id.*

[129] *Id.*

[130] "[Business concerns] are affiliates of each other when one concern controls or has the power to control the other or a third party or parties controls or has the power to control both." 13 C.F.R. § 21.103(a)(1).

another element of the definition of "small business" requires that an entity not be dominant in its field of operation. We are unable at this time to define or quantify the criteria that would establish whether a specific television broadcast station is dominant in its field of operation. Accordingly, the estimate of small businesses to which rules may apply does not exclude any television station from the definition of a small business on this basis and is therefore possibly over-inclusive. Also, as noted above, an additional element of the definition of "small business" is that the entity must be independently owned and operated. The Commission notes that it is difficult at times to assess these criteria in the context of media entities and its estimates of small businesses to which they apply may be over-inclusive to this extent.

38. *Broadband Radio Service and Educational Broadband Service.* Broadband Radio Service systems, previously referred to as Multipoint Distribution Service (MDS) and Multichannel Multipoint Distribution Service (MMDS) systems, and "wireless cable," transmit video programming to subscribers and provide two-way high speed data operations using the microwave frequencies of the Broadband Radio Service (BRS) and Educational Broadband Service (EBS) (previously referred to as the Instructional Television Fixed Service (ITFS)).[131]

39. *BRS* - In connection with the 1996 BRS auction, the Commission established a small business size standard as an entity that had annual average gross revenues of no more than $40 million in the previous three calendar years.[132] The BRS auctions resulted in 67 successful bidders obtaining licensing opportunities for 493 Basic Trading Areas (BTAs). Of the 67 auction winners, 61 met the definition of a small business. BRS also includes licensees of stations authorized prior to the auction. At this time, we estimate that of the 61 small business BRS auction winners, 48 remain small business licensees. In addition to the 48 small businesses that hold BTA authorizations, there are approximately 86 incumbent BRS licensees that are considered small entities (18 incumbent BRS licensees do not meet the small business size standard).[133] After adding the number of small business auction licensees to the number of incumbent licensees not already counted, there are currently approximately 133 BRS licensees that are defined as small businesses under either the SBA or the Commission's rules.

40. In 2009, the Commission conducted Auction 86, the sale of 78 licenses in the BRS areas.[134] The Commission offered three levels of bidding credits: (i) a bidder with attributed average annual gross revenues that exceed $15 million and do not exceed $40 million for the preceding three years (small business) received a 15 percent discount on its winning bid; (ii) a bidder with attributed average annual gross revenues that exceed $3 million and do not exceed $15 million for the preceding three years (very small business) received a 25 percent discount on its winning bid; and (iii) a bidder with attributed average annual gross revenues that do not exceed $3 million for the preceding three years (entrepreneur) received a 35 percent discount on its winning bid.[135] Auction 86 concluded in 2009 with the sale of 61 licenses.[136] Of the ten winning bidders, two bidders that claimed small business status won

---

[131] *Amendment of Parts 21 and 74 of the Commission's Rules with Regard to Filing Procedures in the Multipoint Distribution Service and in the Instructional Television Fixed Service and Implementation of Section 309(j) of the Communications Act—Competitive Bidding*, Report and Order, 10 FCC Rcd 9589, 9593, para. 7 (1995).

[132] 47 CFR § 21.961(b)(1).

[133] 47 U.S.C. § 309(j). Hundreds of stations were licensed to incumbent MDS licensees prior to implementation of Section 309(j) of the Communications Act of 1934, 47 U.S.C. § 309(j). For these pre-auction licenses, the applicable standard is SBA's small business size standard of 1500 or fewer employees.

[134] *Auction of Broadband Radio Service (BRS) Licenses*, *Scheduled for October 27*, *2009*, *Notice and Filing Requirements*, *Minimum Opening Bids*, *Upfront Payments*, *and Other Procedures for Auction 86*, Public Notice, 24 FCC Rcd 8277 (2009).

[135] *Id*. at 8296 para. 73.

[136] *Auction of Broadband Radio Service Licenses Closes*, *Winning Bidders Announced for Auction 86*, *Down Payments Due November 23*, *2009*, *Final Payments Due December 8*, *2009*, *Ten-Day Petition to Deny Period*, Public Notice, 24 FCC Rcd 13572 (2009).

4 licenses; one bidder that claimed very small business status won three licenses; and two bidders that claimed entrepreneur status won six licenses.

41. *EBS* - Educational Broadband Service has been included within the broad economic census category and SBA size standard for Wired Telecommunications Carriers since 2007. Wired Telecommunications Carriers are comprised of establishments primarily engaged in operating and/or providing access to transmission facilities and infrastructure that they own and/or lease for the transmission of voice, data, text, sound, and video using wired telecommunications networks. Transmission facilities may be based on a single technology or a combination of technologies."[137] The SBA's small business size standard for this category is all such firms having 1,500 or fewer employees.[138] U.S. Census Bureau data for 2012 show that there were 3,117 firms that operated that year.[139] Of this total, 3,083 operated with fewer than 1,000 employees.[140] Thus, under this size standard, the majority of firms in this industry can be considered small. In addition to U.S. Census Bureau data, the Commission's Universal Licensing System indicates that as of October 2014, there are 2,206 active EBS licenses. The Commission estimates that of these 2,206 licenses, the majority are held by non-profit educational institutions and school districts, which are by statute defined as small businesses.[141]

D. Description of Projected Reporting, Recordkeeping, and Other Compliance Requirements for Small Entities

42. The excavation or deployment boundaries of an eligible facilities request poses significant policy implications associated with the Commission's section 6409(a) rules. We anticipate that any rule changes that result from the *Notice* will provide certainty for providers, state and local governments, and other entities interpreting the section 6409(a) rules. In the *Notice,* we seek comment on changes to our rules regarding the definition of a "site" surrounding a tower, as well as streamlined treatment pursuant to the section 6409 rules for an excavation or deployments outside the boundaries of an existing tower site,.[142] The Commission does not believe that our resolution of these matters will create any new reporting, recordkeeping, or other compliance requirements for small entities or others that will be impacted by our decision.

43. Specifically, we propose to amend the definition of the term "site" in section 1.6100(b)(6) to make clear that "site" refers to the current boundary of the leased or owned property surrounding the tower and any access or utility easements currently related to the site on the date the facility was last reviewed and approved by a locality. In addition, we propose to change the Commission's rules to allow streamlined treatment under the section 6409 rules for "compound expansions" (i.e. excavation or facility deployments outside the current boundaries of a macro tower compound) of up to 30 feet in any direction outside the boundary of a site. This change to the existing rule, which was requested by industry commenters, is opposed by state and local government jurisdictions, and was previously considered but not adopted by the Commission in the *2014*

---

[137] *See* U.S. Census Bureau, *2017 NAICS Definition, "517311 Wired Telecommunications Carriers"* (partial definition), http://www.census.gov/cgi-bin/sssd/naics/naicsrch?code=517311&search=2017.

[138] *See* 13 CFR § 121.201, NAICS Code 517311 (previously 517110).

[139] *See* U.S. Census Bureau, *2012 Economic Census of the United States,* Table ID: EC1251SSSZ5, *Information: Subject Series - Estab & Firm Size: Employment Size of Firms for the U.S.: 2012,* NAICS Code 517110, https://data.census.gov/cedsci/table?text=EC1251SSSZ5&n=517110&tid=ECNSIZE2012.EC1251SSSZ5&hidePreview=false.

[140] *Id.*

[141] The term "small entity" within SBREFA applies to small organizations (non-profits) and to small governmental jurisdictions (cities, counties, towns, townships, villages, school districts, and special districts with populations of less than 50,000). 5 U.S.C. §§ 601(4)-(6).

[142] 47 CFR § 1.6100(b)(6), (7)(iv).

Infrastructure Order. The *Notice* also seeks comment on whether to revise the definition of "site" without making the proposed change to allow for excavation or deployment of up to 30 feet outside the site. It seeks further comment on whether to define site in section 1.6100(b)(6) as the boundary of the leased or owned property surrounding the tower and any access or utility easements related to the site *as of the date an applicant submits a modification request*.

44. We do not anticipate rule changes resulting from the *Notice* to cause any new recordkeeping, reporting, or compliance requirements for entities preparing eligible facilities requests under section 6409(a) because entities are required to submit construction proposals outlining the work to be done regardless of whether the project qualifies as an eligible facilities request under section 6409(a). Additionally, while we do not anticipate that any action we take on the matters raised in the *Notice* will require small entities to hire attorneys, engineers, consultants, or other professionals to comply, the Commission cannot quantify the cost of compliance with the potential changes discussed in the *Notice*. As part of our invitation for comment however, we request that parties discuss any tangible benefits and any adverse effects as well as alternative approaches and any other steps the Commission should consider taking on these matters. We expect the information we receive in comments to help the Commission identify and evaluate relevant matters for small entities, including compliance costs and other burdens that may result from the matters raised in the *Notice*.

E. Steps Taken to Minimize the Significant Economic Impact on Small Entities, and Significant Alternatives Considered

45. The RFA requires an agency to describe any significant, specifically small business, alternatives that it has considered in developing its approach, which may include the following four alternatives (among others): (1) the establishment of differing compliance or reporting requirements or timetables that take into account the resources available to small entities; (2) the clarification, consolidation, or simplification of compliance or reporting requirements under the rule for such small entities; (3) the use of performance, rather than design, standards; and (4) an exemption from coverage of the rule, or any part thereof, for such small entities.[143]

46. The Commission believes that clarifying the parameters of excavation or deployment within or around a "site" under section 1.6100 will provide more certainty to relevant parties and enable small entities and others to navigate more effectively state and local application processes. As a result, we anticipate that any clarifying rule changes on which the *Notice* seeks comment may help reduce the economic impact on small entities that may need to deploy wireless infrastructure by reducing the cost and delay associated with the deployment of such infrastructure.

47. To assist the Commission in its evaluation of the economic impact on small entities, and of such a rule change generally, and to better explore options and alternatives, the *Notice* asks commenters to discuss any benefits or drawbacks to small entities associated with making such a rule change. Specifically, we inquire whether there are any specific, tangible benefits or harms from changing the definition of "site" or applying section 6409(a)'s streamlined process to compound expansions, which may include an unequal burden on small entities.

48. The Commission is mindful that there are potential impacts from our decisions for small entity industry participants as well as for small local government jurisdictions. We are hopeful that the comments we receive illuminate the effect and impact of the proposed regulations in the *Notice* on small entities and small local government jurisdictions, the extent to which the regulations would relieve any burdens on small entities, including small local government jurisdictions, and whether there are any alternatives the Commission could implement that would achieve the Commission's goals while at the same time minimizing or further reducing the economic impact on small entities, including small local government jurisdictions.

[143] *See* 5 U.S.C. § 603(c)(1)-(4).

49. The Commission expects to consider more fully the economic impact on small entities following its review of comments filed in response to the *Notice*. The Commission's evaluation of the comments filed in this proceeding will shape the final alternatives we consider, the final conclusions we reach, and any final actions we ultimately take in this proceeding to minimize any significant economic impact that may occur on small entities, including small local government jurisdictions.

F. Federal Rules that May Duplicate, Overlap, or Conflict with the Proposed Rules

50. None.

STATEMENT OF
CHAIRMAN AJIT PAI

Re: *Implementation of State and Local Governments' Obligation to Approve Certain Wireless Facility Modification Requests Under Section 6409(a) of the Spectrum Act of 2012*, WT Docket No. 19-250, RM-11849

Promoting American leadership in 5G wireless technology has been one of my top priorities since becoming Chairman. To that end, the FCC has been executing my 5G FAST plan, which includes three key components: pushing more spectrum into the marketplace, making it easier to deploy wireless infrastructure, and modernizing outdated regulations to expedite the deployment of fiber for wireless backhaul.

With respect to spectrum, the Commission has left no stone unturned in its quest to make a mix of low-, mid-, and high-band spectrum available for 5G services. Over the past 18 months, the Commission has concluded three auctions for high-band spectrum, making nearly 5,000 megahertz of spectrum available for next-generation wireless services. Our most recent auction, Auction 103, offered licenses for 3,400 megahertz of spectrum—the largest offering in the Commission's history. Carriers are acting quickly to put this spectrum to use for 5G service. And the Commission continues to work on making additional low-band spectrum available. We are nearing the end of the post-incentive auction repack, which is making available 600 MHz band spectrum for 5G on a nationwide basis, and we have reformed rules for the 800 MHz and 900 MHz bands.

But perhaps the FCC's most intense work over the course of the last couple of years has involved making additional mid-band spectrum available for 5G. Specifically, we adopted rule changes last July to liberate the 2.5 GHz band and put more of this underused spectrum to work for mobile broadband (including adopting a priority filing window to make this spectrum available for service to rural Tribes). Thanks to Commissioner O'Rielly's efforts, we've improved rules for operations in the 3.5 GHz band and done the necessary coordination and technical work in the band. As a result, 150 megahertz of 3.5 GHz band spectrum is available today for the deployment of innovative services, and we'll begin an auction of 70 megahertz of Priority Access Licenses on July 23, 2020. We've adopted service rules to make available 280 megahertz of spectrum in the C-band for 5G and are on track to auction that spectrum on December 8 of this year. And just recently, we announced that satellite incumbents have agreed to expedite the relocation process, so this 280 megahertz of spectrum will be available for 5G on an accelerated basis. None of this was easy. There were plenty of technical, political, and other challenges along the way. Nevertheless, the FCC majority persisted. And we're getting major results.

Of course, in addition to pushing more spectrum into the marketplace, a key component of the Commission's 5G FAST strategy has been updating our wireless infrastructure policies to encourage private-sector investment in the physical building blocks of 5G networks. And today's Declaratory Ruling and Notice of Proposed Rulemaking does just that. Commissioner Carr has spearheaded the Commission's efforts to update our wireless infrastructure policies. And this item, which was developed under his leadership, will clear up some of the confusion that has surrounded our rules implementing section 6409(a) of the Spectrum Act of 2012. These regulations apply when wireless infrastructure companies want to upgrade the equipment on existing structures, such as replacing antennas on a macro tower or adding antennas to a building.

These clarifications will accelerate the build out of 5G infrastructure by avoiding misunderstandings and reducing the number of disputes between local governments and wireless infrastructure builders—disputes that lead to delays and lawsuits. With today's action, we continue to advance the same goal that underlay the Spectrum Act and inspired the Commission's section 6409(a) regulations in the first place—avoiding unnecessary ambiguities and roadblocks in order to advance wireless broadband service for all Americans.

Now, there are some who argue that we should have slowed down or stopped our work on today's Declaratory Ruling because of the COVID-19 pandemic. I could not disagree more. The COVID-19 pandemic isn't a reason to slow down our efforts to expand wireless connectivity. It's a reason to speed them up. The pandemic has highlighted the need for all Americans to have broadband connectivity as soon as possible. Telehealth, remote learning, telework, precision agriculture—all of these things require broadband. And it is an iron law that you can't have broadband without broadband infrastructure.

And the argument that local governments have not had a sufficient opportunity to weigh in on these issues has no merit. The petitions on which we are acting today were filed in August and September of 2019, well before the COVID-19 pandemic. And the entire period for public comment on those petitions took place last year—also well before the COVID-19 pandemic.

These calls for delay are nothing new. Earlier this year, for example, some insisted that we should do absolutely nothing to make C-band spectrum available unless and until Congress passed a law on the subject. How's that advice looking now? If we had followed that politically-motivated counsel, we would *still* be stuck at square one, half a year later, with no prospect of movement. Instead, we're on track for a major C-band spectrum auction this year. The same old tactic is now applied to wireless infrastructure. Wait until . . . whenever, we are told. But waiting to deploy more wireless infrastructure isn't going to deliver advanced wireless services to American consumers, and it isn't going to make the United States the global leader in 5G.

The bottom line is this: It's easy to *say* that you favor moving forward quickly on 5G, but what actually matters is to *do* it. So I appreciate Commissioners O'Rielly and Carr for not just saying, but doing what's necessary to usher in the next generation of wireless technology for the American people.[1]

Thank you to the team that worked hard on this item. From the Wireless Telecommunications Bureau, including Paul D'Ari, Garnet Hanly, Kari Hicks, William Holloway, Susannah Larson, Belinda Nixon, Dana Shaffer, Donald Stockdale, Cecilia Sulhoff, and Joel Taubenblatt, and also Jiaming Shang and David Sieradzki, both formerly of the Wireless Telecommunications Bureau; from the Office of General Counsel, Deborah Broderson, Mike Carlson, David Horowitz, Linda Oliver, Bill Richardson, and Anjali Singh; from the Office of Economics and Analytics, Catherine Matraves and Patrick Sun; from the Wireline Competition Bureau, Adam Copeland, Elizabeth Drogula, and Michael Ray; from the Enforcement Bureau, Daniela Arregui and Jason Koslofsky; and from the Office of Communications Business Opportunities, Chana Wilkerson.

[1] *Cf. Seinfeld*, "The Alternate Side," Season 3, Episode 11 (Dec. 4, 1991) ("See, you know how to take the reservation, you just don't know how to *hold* the reservation. And that's really the most important part of the reservation, the holding. Anybody can just take them."), *available at* https://www.youtube.com/watch?v=dSZYsyrP3Co.

STATEMENT OF
COMMISSIONER MICHAEL O'RIELLY

Re: *Implementation of State and Local Governments' Obligation to Approve Certain Wireless Facility Modification Requests Under Section 6409(a) of the Spectrum Act of 2012*, WT Docket No. 19-250, RM-11849

Today, the Commission refocuses its infrastructure efforts on the foundation of wireless networks – the macro tower. The Commission has taken several steps to reduce the regulatory burdens on siting small cells, but similar updates for macros have been lagging. A business plan centered on small cells and millimeter waves may work in our largest cities, but traditional towers and mid bands will be needed throughout much of the United States, especially in rural areas, where small cells do not, generally-speaking, make the most sense, at least at the current time.

I started pushing for a review of the barriers facing macro tower siting around five years ago, as industry started to consider what a 5G suburban and rural network build would look like. While it is unfortunate that we didn't get to this sooner, I am grateful that Commissioner Carr has honored his word to me that we would address hurdles that some localities have placed in the way of large tower siting. With significant progress being made on mid-band frequencies, it is imperative that we facilitate the deployment of macro towers that will be used to deliver the myriad of offerings mid-band spectrum will enable. And, as I have said before, our actions are precipitated by the behavior of a few bad actors, and here we address some of the problems being experienced. I fully recognize that many, if not most, local and state governments see the great benefit that these networks will bring and are actively working to fulfill the needs and demands of their citizens.

While the Commission took steps in 2014, pursuant to Congress's direction under Section 6409 of the Spectrum Act of 2012, to set localities straight on unacceptable activity that when it came to collocating facilities, some entities are still slowing down progress or doing what they can to stop wireless innovation from reaching consumers. Today, we clarify how some of our rules implemented in response to section 6409 should be interpreted, such as when the shot clock begins, how to measure height increases for towers when adding additional antennas, what is an equipment cabinet, and the treatment of concealment elements, among others. I am pleased that, at my request, further details were provided about the documentation needed to start the shot clock and to evidence that concealment elements were envisioned when obtaining a locality's approval. Such guidance is necessary so that all parties understand expectations and to avoid disputes down the road. While I understand some have asked that we delay today's action due to some concerns, many of the clarifications are straightforward and should reduce the burdens on locality staff reviewing applications. And, these clarifications are needed to facilitate the expansion of 5G networks by wireless providers and help entities like FirstNet meet their public safety obligations.

Additionally, the notice portion of today's item seeks comment on a proposal to allow minimal compound expansions under section 6409 streamlined processing. I am pleased that my request was accepted to make this a proposal, as opposed to simply seeking comment. Over the years, tower companies have repeatedly come to me with the challenges they face when compound expansions are needed to accommodate additional equipment for collocation purposes. And, there is a good foundation for such a change, as the construction of replacement towers that do not expand a compound by more than 30 feet are excluded from historic preservation review under a nationwide programmatic agreement. I expect that an order on this proposal will be presented before the Commission as quickly as possible.

Moreover, localities should note that the Commission is taking these matters seriously and will continue to issue such orders if our intent is being contravened or our rules implemented incorrectly. We will be ready to follow up on any issue, including those that we did not cover here, such as the

inappropriate use of other local permitting processes to hold up infrastructure siting or charging excessive fees.

Finally, I thank everyone involved for bringing this item to a vote and the staff for their continued efforts to facilitate infrastructure deployment. Now that we have clarified some areas where there were "misunderstandings" over the rules for streamlined collocations, it is time to conclude the ultimate collocation problem – twilight towers. The Commission needs to resolve this quagmire so that these towers can hold additional antennas, which are needed to provide wireless services to the American people.

I will approve the item.

STATEMENT OF
COMMISSIONER BRENDAN CARR

Re: *Implementation of State and Local Governments' Obligation to Approve Certain Wireless Facility Modification Requests Under Section 6409(a) of the Spectrum Act of 2012*, WT Docket No. 19-250, RM-11849

Two years is about how long it takes to build a new macro tower. The process typically includes zoning, construction, and electrical permits; city council presentations and public town halls; environmental and historical preservation reviews; negotiation about aesthetics and design—and that's all *after* a provider has studied demand, engineered the signal, and bought land.

It's a lengthy, involved, expensive process. And in some ways you can understand why. Building a couple hundred foot tall structure doesn't happen every day, and once it's built, a tower can provide service for decades.

Local governments, industry, and Congress have concluded that there's often a better way. Reusing macro towers through collocating multiple providers and updating equipment can provide the public the benefits it deserves—wide coverage and fast connections—while avoiding the cost and delays associated with building new towers from scratch. It's common sense that putting new equipment on old towers is less intrusive and requires less regulatory review than new tower construction.

I had the chance to see how straightforward a collocation can be last week. That's when I drove out to a farm in Maryland and joined a tower crew that was swapping out 2G antennas for 5G ones on a macro tower. Take a look.

https://twitter.com/BrendanCarrFCC/status/1268263380420354053

Aaron and Charlie are among the 25,000 tower techs building broadband across the country literally with their hands. While their jobs are far from easy, the project they completed in about an hour last week was among their easiest: taking off an old antenna and attaching a new one.

Congress encouraged collocations like these by making them simpler through Section 6409 of the Spectrum Act. That law says that local governments "may not deny, and shall approve" any tower modification "that does not substantially change [its] physical dimensions." In 2014, the Commission wrote rules to implement the law, in particular defining what constitutes "substantial change."

In the last six years, those rules have been used to upgrade thousands of towers. The upgrades enabled 4G LTE service, especially on macro towers in rural America. They're being used now to build America's world-leading 5G networks. And they're benefiting communities by reducing the potential for redundant towers, creating less costly and disruptive infrastructure.

There have been some bumps along the way, and those are partly due to our 2014 rules. In some instances, our definition of "substantial change" wasn't as clear as it could have been, and there have been some disagreements over how to interpret our 60-day shot clock for local government approval. Those disagreements—the lack of clarity in our rules—can themselves slow down Internet builds. We aim to resolve those ambiguities in this declaratory ruling and notice. I'll highlight a few of the key actions we take today.

- We explain that the 60-day shot clock we adopted in 2014 begins when a provider takes the first procedural step that the locality specifies and shows in writing that the project qualifies for expedited consideration. The myriad processes that have grown outside of our shot clock should be brought back within it. Sixty days means 60 days.

- We clarify that when we use the term "concealment element," we're referring to those elements that make a stealthed tower look like something else—a clock tower or a tree, for example. A change becomes substantial and so doesn't qualify for expedited approval if a reasonable person would think that the modified tower no longer looks like that clock tower or tree.

- And we note that localities can place a number of conditions on new construction of a tower that can't be circumvented through this expedited process. However, there has to be express evidence that a condition really was a condition of approval.

I am proud of the thorough and thoughtful process the Commission took to craft this item, and I especially thank the Wireless Telecommunications Bureau and its infrastructure team for their skill and diligence. The two petitions that prompted this order came to us more than nine months ago. We sought comment on the petitions, and at the request of local governments and utilities, we extended the comment period into November. The record that developed was robust. We heard from infrastructure builders, broadband providers, local governments, and everyday Americans alike.

Localities were especially active. We heard from 70 local governments and their associations, and they provided us nearly 700 pages of detailed comments. They made a substantial contribution to this order, and their positions carried the day on several issues we decide. For example, we require industry to make written submissions before they can claim that the shot clock starts, and we protect a broad swath of localities' conditions of tower approval.

In the end, by bringing greater clarity to our rules, our decision reduces disagreements between providers and governments. And it separates the wheat from the chaff—the more difficult approval decisions, such as whether and how to construct a new tower, from the easier ones, such as whether to allow an existing tower to be upgraded.

It's also important that we act now because providing more broadband for more Americans has never been so important. It's at the forefront of our minds during this COVID-19 pandemic as kids learn from home, parents provide for their families away from the office, patients access critical care outside of hospitals, and we all connect to each other at a distance. Making upgrades easier is at the heart of 6409 and this order—and it comes at a time when we need as much capacity as we can get. So I am glad that we move forward today with clarifications that will help tower crews connect even more communities.

Our decision here is also the latest step in a series that the FCC has taken since 2017 to modernize our approach to 5G. Back then, it cost too much and took too long to build Internet infrastructure in this country. So we updated the environmental and historic preservation rules that were slowing down small cell builds. We built on the commonsense reforms adopted by the states and reined in outlier conduct. And we streamlined the process for swapping out utility poles to add wireless equipment, among other reforms.

I thank Chairman Pai for tapping me to lead this infrastructure work. The Commission has unleashed private sector investment that already is delivering results for the American people. The very first commercial 5G service launched here, in the U.S., in 2018. By the end of that year, 14 communities had 5G service. Halfway through 2019, that figure expanded to more than 30. And one provider alone has now committed to building 5G to 99 percent of the U.S. population.

America's momentum for 5G is now unmistakable. You can see it not only in big cities like New York or San Francisco, but in places like Sioux Falls, South Dakota where 5G small cells are live and in rural communities like the one I visited last week in Maryland where macro towers are beaming 5G

through farms and forests. Our infrastructure work will continue until every community has a fair shot at next-generation connectivity.

We call our decision today the 5G Upgrade Order because it will accelerate wireless service upgrades for the benefit of so many Americans. It will be an upgrade for rural America, as families who never had a choice in wireless will get new service. It will be an upgrade for first responders, as dedicated networks and expanded capacity are built on existing towers. And it will be an upgrade for all of us, as our networks blow past previous technologies to world-leading 5G.

I'm grateful for the strong support this order has received from dozens of leaders in local governments and in Congress, infrastructure builders, farmers and ranchers, first responders, and technologists. And I especially want to thank the Commission staff without whom this 5G Upgrade Order would not exist:

From the Wireless Telecommunications Bureau: Paul D'Ari, Garnet Hanly, Kari Hicks, William Holloway, Susannah Larson, Belinda Nixon, Dana Shaffer, Donald Stockdale, Cecilia Sulhoff, and Joel Taubenblatt, and also Jiaming Shang and David Sieradzki, both formerly of the Wireless Telecommunications Bureau.

From the Office of General Counsel: Deborah Broderson, Michael Carlson, David Horowitz, Linda Oliver, Bill Richardson, and Anjali Singh.

From the Office of Economics and Analytics: Catherine Matraves and Patrick Sun.

From the Wireline Competition Bureau: Adam Copeland, Elizabeth Drogula, and Michael Ray.

From the Enforcement Bureau: Daniela Arregui and Jason Koslofsky.

And from the Office of Communications Business Opportunities: Chana Wilkerson.

Thank you for your contributions to this order. It has my support.

STATEMENT OF
COMMISSIONER JESSICA ROSENWORCEL,
DISSENTING

Re: *Implementation of State and Local Governments' Obligation to Approve Certain Wireless Facility Modification Requests Under Section 6409(a) of the Spectrum Act of 2012*, WT Docket No. 19-250, RM-11849

Let's start with the numbers.

More than 113,000 people have died in the cruel pandemic that is affecting communities across the country. Nearly 43 million Americans have filed for unemployment benefits as the economy reels from this public health catastrophe. The unemployment rate is now at its highest levels since the Great Depression. Protests have erupted in all 50 states as we face a nationwide reckoning over racial injustice.

We can't say with certainty where this overwhelming series of events takes us next. I pray it is toward a more just future. I hope it is one where the truths we hold to be self-evident are apparent not only in word but in deed.

But we can say with certainty that state and local governments are on the front line in all of these crises. That means they are dealing with an epic combination of illness, joblessness, food insecurity, social distancing, and public safety challenges—at the same time.

Moreover, all of this work is being carried out with fewer resources than ever before. That's because social distancing has reduced consumer spending and wages, causing tax revenues to plummet. At the same time, the demand for funding basic social services has gone up. This has created an unprecedented strain on state and local budgets.

So understandably mayors and governors across the country are ringing the alarm. They are wrestling with historic crises and struggling to find a new way forward in a period of profound civil unrest. They want to be heard by Washington. But today's decision demonstrates that at the Federal Communications Commission we're not listening.

Let me explain why. Today's decision seeks to clarify how the agency interprets Section 6409 of the Middle Class Tax Relief and Job Creation Act. That sounds technocratic. But it goes to the heart of what role cities and towns get to play in decisions about the communications infrastructure in their backyard. That's important for communities across the country and for our national wireless ambitions.

Today the FCC adopts a declaratory ruling that requires every state and local government to immediately review and update their current ordinances, policies, and application systems involving wireless towers. They have to rework the way they process new requests, how they measure tower height, what they do with requests to add more equipment, and how they conceal structures to preserve the visual character of their communities. Addressing these things is not unreasonable. But these clarifications can be hard to put into practice and they were shared with state and local governments for the first time only three weeks ago—and my goodness, they've been busy.

So it's no wonder than that we have heard from the National League of Cities. We've heard from the United States Conference of Mayors. We've heard from the National Association of Counties. We've heard from the National Association of Telecommunications Officers and Advisors. We've heard from the National Association of Towns and Townships. Together they represent more than 19,000 cities, 3,069 counties, and 10,000 towns across the country.

You know what they want? It's not radical. They want a bit more time to weigh in on our decision, so they can be in a better place to implement it. They want this time because their resources are strained by a deadly virus, economic calamity, and civil unrest. As 24 members of the United States House of Representatives Committee on Energy and Commerce noted last week, "[i]f local governments are forced to respond to this Declaratory Ruling instead of focusing on their public health and safety responses, it very well may put Americans' health and safety at risk."

But the FCC has decided to ignore this modest request for time to review. I don't get it. Why can't we acknowledge what is happening around us?

The sad truth is that this is not the first time we've given short shrift to the pleas of local governments who are strained by these historic days. It was just a few weeks ago when city officials and local firefighters asked the FCC to give them more time to weigh in on the court remand of our misguided decision to roll back net neutrality. But we didn't grant their request.

However, when companies suggested they needed more time to clear the 3.5 GHz band because of the pandemic, we were quick to oblige. We pushed back the start of our next spectrum auction too, again citing business disruptions caused by the coronavirus. The FCC even granted an extension of time to a foreign company it is investigating as a national security threat to the United States.

Why can't we offer the same courtesy to state and local governments? The law demonstrates a clear congressional policy in favor of removing locally imposed and unreasonably discriminatory obstacles to modifying existing facilities in order to foster the rapid deployment of wireless infrastructure. I know. As congressional staff, I helped write it. But some of the decisions we make today seem to be less about speeding up routine approvals under this law and more about lowering the costs of non-routine approvals by retrofitting them into this process too.

If we want to see infrastructure expand broadly and equitably across this country it takes federal and state and local authorities working together to do so. History proves this is true. And in these historic times this agency should not be ramrodding this effort through without listening to cities and towns across the country. They called for a bit more time. But the Federal Communications Commission hung up. I dissent.

STATEMENT OF COMMISSIONER GEOFFREY STARKS DISSENTING

Re: *Implementation of State and Local Governments' Obligation to Approve Certain Wireless Facility Modification Requests Under Section 6409(a) of the Spectrum Act of 2012*, WT Docket No. 19-250, RM-11849

More than 106,000 people have died from COVID-19 so far and unemployment has hit its highest levels since the Great Depression. The school year is ending, and millions of children have missed months of in-classroom instruction. And in the last 2 weeks, the recent protests have brought millions of people into the streets of cities across the country to demonstrate for justice. This is a true moment in American history.

State and local governments form the front line for all of these issues. They run the public hospitals and emergency response units treating the sick, dispense benefits to the unemployed, operate the schools struggling to provide distance learning to our children, and oversee the police departments that are both the focus on the demonstrations and helping to keep us safe. Even in good times, they operate on tight budgets and limited resources.

For State and local governments across the country, tax revenues are declining due to the economic fallout of COVID-19, even as they must increase their expenditures to respond to the pandemic and the demonstrations. Replacing retiring employees is out of the question, and layoffs and furloughs are under consideration, even as these governments prepare their budgets for the next year.

That is the moment in time in which we place today's item. Let me be clear -- I support the deployment of infrastructure to improve service and connect more Americans. Low-income and minority families in particular rely on wireless service, and I hope that any benefits from today's item will result in improved service and more affordable offerings for all neighborhoods, not just those with the wealthiest Americans. Moreover, tower technician jobs offer a path to financial security for many Americans even in these uncertain times. Finally, streamlining the infrastructure approval process has had broad support. Congress intended to provide a quick path for approval of straightforward modifications when it adopted Section 6409, and a unanimous Commission adopted implementing rules back in 2014.

But this isn't the right way to achieve those goals. Instead of reducing burdens, today's Declaratory Ruling imposes new obligations on local governments at a time where they have the least amount of time and resources. Instead of providing clarity, it creates uncertainty. Because of these issues, I'm concerned that today's decision may actually slow the growth of advanced wireless service rather than accelerating it.

Those who support this decision claim that it's necessary because local governments have unreasonably blocked straightforward modifications to existing wireless sites, insisting on burdensome and unnecessary meetings and documentation. According to the petitions, these alleged practices have slowed or prevented upgrades that would provide advanced services and allow more Americans to realize the promise of 5G. Supporters claim that we must act now to encourage the growth of these services.

This is starkly different from what these parties are publicly and commercially saying elsewhere. Just recently, T-Mobile announced that it now offers 5G coverage in all 50 states. AT&T says it remains on track to offer nationwide 5G sometime this summer, and Verizon plans to offer 5G service in 60 cities by the end of 2020. DISH remains committed to building a standalone nationwide 5G network in the next few years, and the major tower companies have asserted that even COVID-19 hasn't slowed down their buildout efforts.

Moreover, despite today's challenges, local governments continue to take timely action on applications from these companies and their partners. Even industry has recognized the efforts of local governments to maintain operations while their offices must be closed, including allowing electronic filing via online portals and email, creating drop boxes for hard copies of documents, and waiving and modifying requirements regarding permits, filing fees and public meetings.

Given the unusual circumstances and the extraordinary efforts by local governments to continue the timely processing of applications, I'm deeply disappointed that we rejected the reasonable request for more time to review the draft order submitted on behalf of local governments across the country and supported by 24 Members of Congress. While it's true that the Petitions underlying this decision were filed last Fall, as today's decision repeatedly notes, we do not adopt the recommendations proposed in those filings. It was only with the release of the draft Declaratory Ruling just three weeks ago that commenters learned that the Commission was even considering certain issues, let alone specific outcomes. Indeed, even the Commissioners only saw the current version yesterday, which contains substantive differences from the original draft.

Even under the best of circumstances, three weeks would not be enough notice for such an important decision, which will affect communities around the nation. At a minimum, we should have deferred our consideration of this item to allow interested parties more time to analyze and comment on the draft decision. But I would have gone further and dealt with these issues through a rulemaking proceeding, with notice of our proposed approach and an opportunity for public comment.

I do agree that our rules could use clarification, but the item here consistently misses the mark. For example, we should clearly define when the Section 6409 shot clock starts. But while the Declaratory Ruling acknowledges the value of preliminary reviews and meetings, it nevertheless starts the shot clock before those events take place and provides no flexibility to adjust once an applicant submits its paperwork and requests that first meeting. Under today's decision, once an applicant has taken these actions, the local government must ensure that every other step in the process is completed before the shot clock expires. This approach not only places an unfair burden on the local governments but could lead to disputes between governments and applicants about the reasonableness of any requirement and whether it can be accomplished within the 60-day shot clock period. We should have done a rulemaking to discuss these issues and how to avoid such outcomes.

There are other issues. In many cases, local governments approved sites years ago, well before passage of the Spectrum Act. Particularly for smaller cities, it's unlikely that their decisions explain the intent behind a particular requirement affecting a site's appearance. Yet today's Declaratory Ruling states that, unless the regulator can provide express evidence in the record demonstrating that a requirement was intended to disguise the nature of the equipment as something other than a wireless facility, the local government must give streamlined treatment to any changes. Moreover, for changes in appearance that don't disguise the nature of the equipment but merely make it harder to notice, the Declaratory Ruling establishes a standard that effectively preempts any requirement that the applicant claims it cannot reasonably meet.

The confusion doesn't stop there. This decision explicitly states that the number of equipment cabinets that can be added to a site is measured for each eligible facilities request and rejects the interpretation that the relevant rule sets a cumulative limit. The local governments are justifiably confused about whether today's decision effectively eliminates any limitation on the number of equipment cabinets that may be added over time. Today's decision disagrees with the suggestion that there's no such limit but fails to explain exactly how a local government would derive it. A rulemaking could have clearly spelled out our expectations.

Taken as a whole, rather than clarifying our policies and expediting approvals, the posture of this Declaratory Ruling is likely to lead to time-consuming and costly disputes about intent and reasonableness between local governments and industry; and furthermore, it is likely to lead to protracted litigation. Moreover, because of the substantial burdens we place on local governments' review of modifications to existing sites, those governments may even give greater scrutiny to initial siting requests, leading to additional frustration and delays.

These problems would be serious in a proposed rulemaking, but the process followed here raises the stakes even higher. Because this is a Declaratory Ruling, it applies retroactively to decisions that may be decades old.[1] This decision will create uncertainty regarding existing sites across the country. Moreover, doing this via a Declaratory Ruling will place an undue burden on local governments that are unfamiliar with the Commission. A clerk in a small city may not realize that a proposed site modification will require her to review not only the Code of Federal Regulations but the language of this decision and our 2014 order.

I wish that we had addressed these issues in a rulemaking proceeding, like the one we initiate today regarding proposed excavations and the meaning of the term "current site." While I have serious reservations about the approach proposed in the NPRM, I agree that we should receive input from the public before we act further in this area, although I would have provided more time for that input. I hope that we reconsider that timetable, given all the other demands currently faced by local governments. I dissent.

[1] *See Connect America Fund Developing a Unified Intercarrier Compensation Regime,* Order on Remand and Declaratory Ruling, WC Docket No. 10-90 *et al*., FCC 19-131 at para. 26 (rel. Dec. 17, 2019) ("As a general matter, declaratory rulings are adjudicatory and are presumed to have retroactive effect.") (citations omitted).

ORIGIN ID:MZZA (317) 249-2028
MICHAEL GASSER
CROWN CASTLE
9045 RIVER ROAD
SUITE 425
INDIANAPOLIS, IN 46240
UNITED STATES US

SHIP DATE: 10JUL20
ACTWGT: 1.00 LB
CAD: 104924213/INET4220

BILL SENDER

TO COUNTY OF OURAY
PLANNING DEPARTMENT
111 MALL ROAD

RIDGWAY CO 81432
(970) 626-9775
INV:
PO:
REF: 1767 668
DEPT:

56BJ2/17B7/FE4A

J201120042401uv

FedEx Express

MON - 13 JUL 4:30P
PRIORITY OVERNIGHT

TRK# 0201 7709 1861 2984

SC MTJA

81432
GJT
CO-US

After printing this label:
1. Use the 'Print' button on this page to print your label to your laser or inkjet printer.
2. Fold the printed page along the horizontal line.
3. Place label in shipping pouch and affix it to your shipment so that the barcode portion of the label can be read and scanned.

Warning: Use only the printed original label for shipping. Using a photocopy of this label for shipping purposes is fraudulent and could result in additional billing charges, along with the cancellation of your FedEx account number.
Use of this system constitutes your agreement to the service conditions in the current FedEx Service Guide, available on fedex.com.FedEx will not be responsible for any claim in excess of $100 per package, whether the result of loss, damage, delay, non-delivery,misdelivery,or misinformation, unless you declare a higher value, pay an additional charge, document your actual loss and file a timely claim.Limitations found in the current FedEx Service Guide apply. Your right to recover from FedEx for any loss, including intrinsic value of the package, loss of sales, income interest, profit, attorney's fees, costs, and other forms of damage whether direct, incidental,consequential, or special is limited to the greater of $100 or the authorized declared value. Recovery cannot exceed actual documented loss.Maximum for items of extraordinary value is $1,000, e.g. jewelry, precious metals, negotiable instruments and other items listed in our ServiceGuide. Written claims must be filed within strict time limits, see current FedEx Service Guide.